BE22

digester gas systems workshop

TD
769.4
D54
1985
MOE

TD
768
.D54
1985
MOE

Ontario

Ministry of the Environment

The Honourable
Jim Bradley
Minister

Gary S. Posen
Deputy Minister

Copyright Provisions and Restrictions on Copying:

This Ontario Ministry of the Environment work is protected by Crown copyright (unless otherwise indicated), which is held by the Queen's Printer for Ontario. It may be reproduced for non-commercial purposes if credit is given and Crown copyright is acknowledged.

It may not be reproduced, in all or in part, part, for any commercial purpose except under a licence from the Queen's Printer for Ontario.

For information on reproducing Government of Ontario works, please contact Service Ontario Publications at copyright@ontario.ca

TD
769.4
.D54
1985

Ref. 72899

© HER MAJESTY THE QUEEN IN
RIGHT OF ONTARIO AS REPRESENTED BY
THE MINISTER OF THE ENVIRONMENT, 1981

DIGESTER GAS SYSTEM
MAINTENANCE WORKSHOP

First edition, September, 1979
Second edition, December, 1981
Third edition, September, 1985

Training & Certification Section
Human Resources & Personnel Dev. Br.
Ministry of the Environment
135 St. Clair Avenue West
TORONTO, Ontario M4V 1P5

17809

PREFACE

The manual for the Digester Gas System Maintenance Workshop is designed as a home study and reference text for treatment plant operators and maintenance staff. It includes safety procedures which must be followed to ensure compliance with appropriate Ontario regulations and codes.

The five day workshop based on the manual is held at the Ministry Training Centre, Ontario Experimental Facility Brampton, Ontario. Successful completion of the program provides the trainee with the knowledge and skills required to maintain a digester gas distribution system. It also prepares him to write the Maintenance Gas Fitter Certification Examination at the end of the course, administered by M.O.E. on behalf of the Ontario Ministry of Consumer and Commercial Relations.

Code CAN I-B105-M81 Digester Gas Systems which applies to the installation of the system for the production handling storage and utilization of digester gas in wastewater treatment plants is published by and available from -

Canadian Gas Association
55 Scarsdale Road
Don Mills, Ontario
M3B 2R3

Other manuals relating to water and wastewater treatment processes published by the Training and Certification Section, Ministry of the Environment, include:

Basic Gas Chlorination Workshop

Basic Water Treatment Operation

Basic Sewage Treatment Operation

Activated Sludge Process Workshop

Primary Treatment and Digestion Workshop

Surface Water Treatment Workshop

Preventive Maintenance Workshop

Pump Operation Workshop

Operation/Maintenance of Water Distribution Systems

Copies may be purchased at:

Ontario Government Book Store
880 Bay Street
Toronto, Ontario

or may be ordered by Mail by writing to:

Ministry of Government Services
Publications Centre
880 Bay Street (5th Floor)
Toronto, Ontario. M7A 1N8

ENTERED JUN 2 6 2003

MOE
Standards Development Branch
LIBRARY

TABLE OF CONTENTS

NUMBER	TOPIC	PAGE NO.
1	Anaerobic Digestion	
	Objectives of Sludge Digestion	1-1
	Process Principles and Theory	
	General	1-1
	Acid Fermentation	1-4
	Acid Regression	1-4
	Alkaline Fermentation	1-4
	Mixing	
	General	1-6
	Mechanical Mixing	1-7
	Gas Recirculation	1-8
	Heating Systems	1-13
2.	Components	
	General	2-1
	Digester Covers	2-1
	Pressure Relief/Vacuum Relief Valves	2-5
	Flame Arrestors	2-6
	Thermal Valves	2-8
	Sediment Traps	2-9
	Drip Trap - Accumulators	2-10
	Manometers	2-12
	Pressure Regulators	2-12
	Pressure Regulator/Flame Traps Assembly	2-12
	Flame Checks	2-14
	Check Valves	2-15
	Explosion Relief Valve	2-16
	Waste Gas Burner	2-17
	High Pressure System	2-18
	Maintenance of Components	2-21

NUMBER	TOPIC	PAGE NO.
3.	Digester Gas Characteristics and Piping	
	Digester Gas Characteristics	3-1
	Piping Identification	3-2
	Piping and Fitting Materials	
	General	3-2
	Carbon Steel	3-3
	Ductile Iron	3-4
	Plastic	3-5
	Alloy	3-5
	Stainless Steel	3-6
	Inspection Points	3-6
	Purging	3-6
	Pressure Testing	3-7
	Piping through Walls/Partitions	3-7
	Underground Piping	3-8
4.	Fuel Characteristics	
	General	4-1
	Fuel Characteristics	
	Natural Gas	4-2
	Propane Gas	4-2
	Fuel Oil	4-2
	Storage of Fuels	4-3
5.	Principles of Combustion	
	General	5-1
	3 Ts of Combustion	
	Temperature	5-2
	Turbulence	5-2
	Time	5-3
	Air in Combustion	5-3

NUMBER	TOPIC	PAGE NO.
6	Burners and Burner Controls	
	General	6-1
	Oil Burners	6-1
	High Pressure Burners	6-4
	Air Nozzles	6-6
	Gas Burners	6-8
	Pilots	6-10
	Gas Valve Train	6-10
	Burner Controls	6-12
	Flame Failure	6-12
7	Safety	
	General	7-1
	Body Infection	7-1
	First Aid	7-2
	General Plant Safety	7-2
	Electrical Maintenance	7-6
	Fire Protection	7-9
	Digester Area Safety	7-10
	Entry into Confined Spaces	7-12
	Digester Cleanout	7-13
	Digester Roof Equipment Repairs	7-15
	Waste Gas Burners	7-17

LIST OF FIGURES

NUMBER	TITLE	PAGE
1-1	Single Stage Digester	1-2
1-2	Two Stage Digester	1-3
1-3	Anaerobic Digestion Process	1-5
1-4	Mechanical Mixer	1-7
1-5	Bubble Guns.....	1-11
1-6	Central Mixing Tube	1-11
1-7	Gas Injection Pipes	1-12
1-8	Heat Exchangers	1-14
1-9	Spiral Heat Exchanger	1-15
1-10	Spiral Heat Exchanger Pattern of Flow	1-17
2-1	Multiple Digester Gas System	2-2
2-2	Fixed Cover	2-3
2-3	Floating Cover	2-3
2-4	Gas Holder Cover	2-3
2-5	Pressure and Vacuum Relief Valves	2-5
2-6	Flame Arrestor	2-7
2-7	Thermal Valve	2-9
2-8	Sediment Trap	2-9
2-9	Drip Trap	2-10
2-10	Manometers	2-11
2-11	Regulators	2-13
2-12	Pressure Regulator/Flame Traps Assembly..	2-14
2-13	Flame Checks	2-15
2-14	Check Valve	2-15
2-15	Explosion Relief Valve	2-16
2-16	Waste Gas Burner	2-17
2-17	High Pressure System	2-19

6-1	Steam Assisted Pressure Atomizer	6-2
6-2	Horizontal Rotary Cup Burner	6-2
6-3	High Pressure Oil Burner	6-3
6-4	Schematic Diagram High Pressure Oil Burner	6-4
6-5	Electrode Settling	6-5
6-6	High Pressure Gun Fuel Nozzle	6-7
6-7	Forced Draft Burner	6-9
6-8	Schematic Dual Gas Valve Train	6-11
6-9	Programming Sequence	6-13

LIST OF APPENDICES

Calculation Weight Requirements Pressure/Vacuum Relief Valves 2-22

Maintenance Guide 2-23

EXTRACTS CODE CAN 1 B149.1-1976 Natural Gas Piping 3-10

EXTRACTS CODE CAN 1 B149.1-1976 Natural Gas Appliances & Equipment 4-4

EXTRACTS CODE CAN 1 B149.2-1976 Propane Burning Appliances & Equipment 4-15

EXTRACTS CODE CSA STANDARD B139-1971 Oil Burning Equipment Installation Requirements. 4-20

Characteristics of Fuels 4-33

EXTRACTS CODE CSA STANDARD B139-1971 Oil Burning Equipment (Controls) 6-15

Combustion Safety Control Timing 6-23

Personal Hygiene 7-18

First Aid 7-20

SUBJECT:

DIGESTER OPERATIONS

TOPIC: 1

ANAEROBIC DIGESTION

OBJECTIVES:

The trainee will be able to:

1. Recall the objectives of sludge digestion.
2. Understand the Anaerobic Digestion Process
3. Show by a simple diagram the Anaerobic Digestion Process
4. Recall the characteristics and composition of a typical digester gas
5. Name the methods used
   a. to heat a digester
   b. for digester mixing

ANAEROBIC
DIGESTION OF SLUDGE

OBJECTIVES OF SLUDGE DIGESTION

Settled solids and floating scum removed from the sedimentation tanks and clarifiers consist of a watery, malodorous mixture called raw sludge. In the majority of the plants this raw sludge is pumped to a digester for treatment before disposal. The primary purpose of sludge digestion is to reduce the complex organic matter present in the raw sludge to a material that:

1. is relatively odour free
2. can be readily dewatered
3. is capable of being disposed of without causing environmental problems
4. will undergo little or no further decomposition

Digestion of sludge can be carried out either by anaerobic or aerobic processes. This topic deals with the anaerobic digestion only, since one of the by-products of this process is digester gas.

ANAEROBIC DIGESTION PROCESS PRINCIPLES AND THEORY

GENERAL

The anaerobic digestion process can be carried out as a single or double stage operation as illustrated in Figures 1-1 and 1-2. The same process parameters apply, although operating techniques differ.

In the anaerobic process the organic solids are first liquified. The organic material is then broken down by the action of two different groups of bacteria living together in the same environment. One group consists of microorganisms commonly referred to as acid formers. The second group, which utilize the acid formed by the acid formers are methane fermenters, commonly referred to as methane formers.

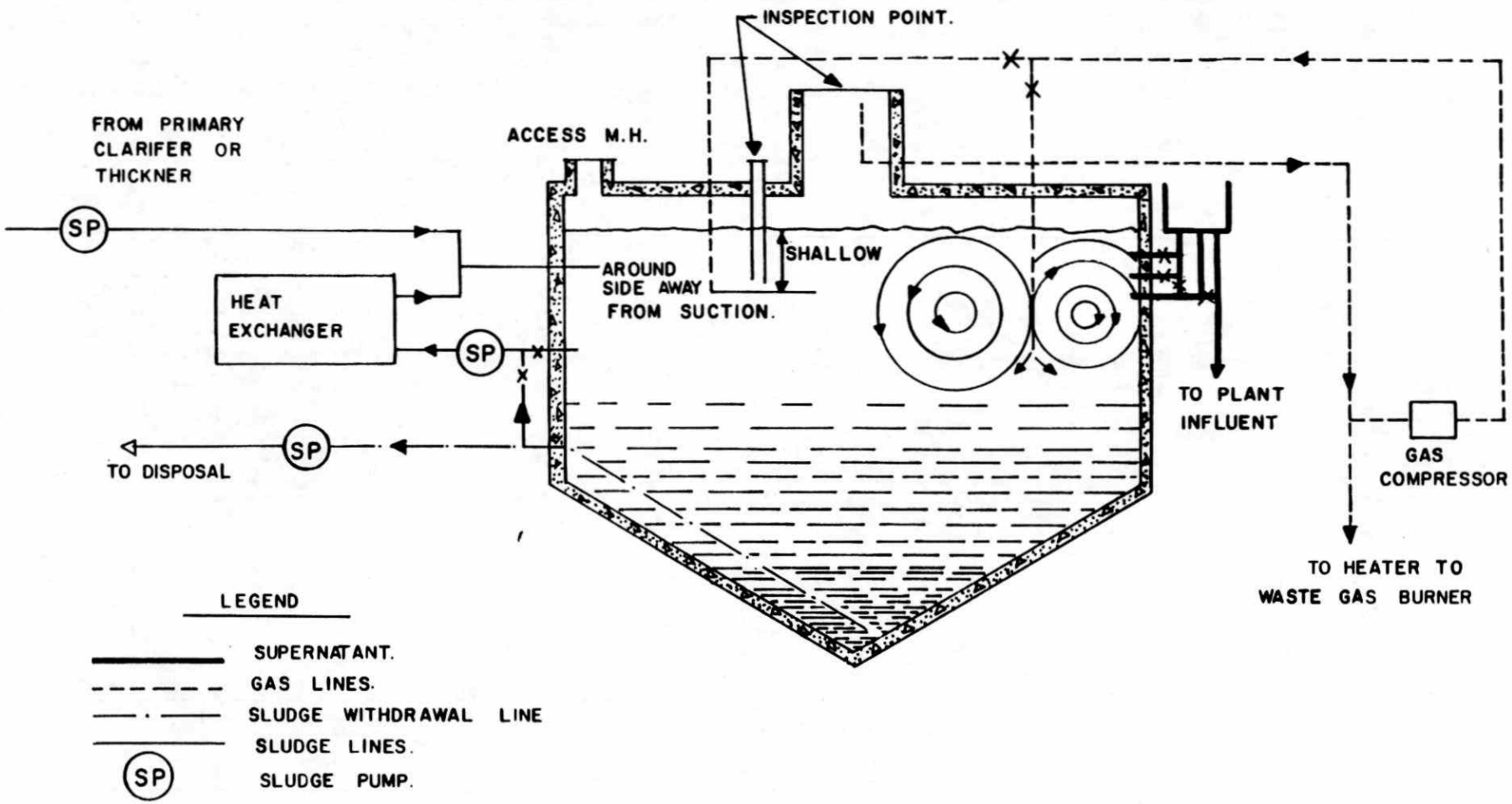
SINGLE STAGE DIGESTER
INSPECTION POINT.
FROM PRIMARY CLARIFER OR THICKNER
ACCESS M.H.
SP
HEAT EXCHANGER
AROUND SIDE AWAY FROM SUCTION.
SHALLOW
TO PLANT INFLUENT
GAS COMPRESSOR
TO DISPOSAL
TO HEATER TO WASTE GAS BURNER
LEGEND
SUPERNATANT.
GAS LINES.
SLUDGE WITHDRAWAL LINE
SLUDGE LINES.
SLUDGE PUMP.

FIGURE 1-1

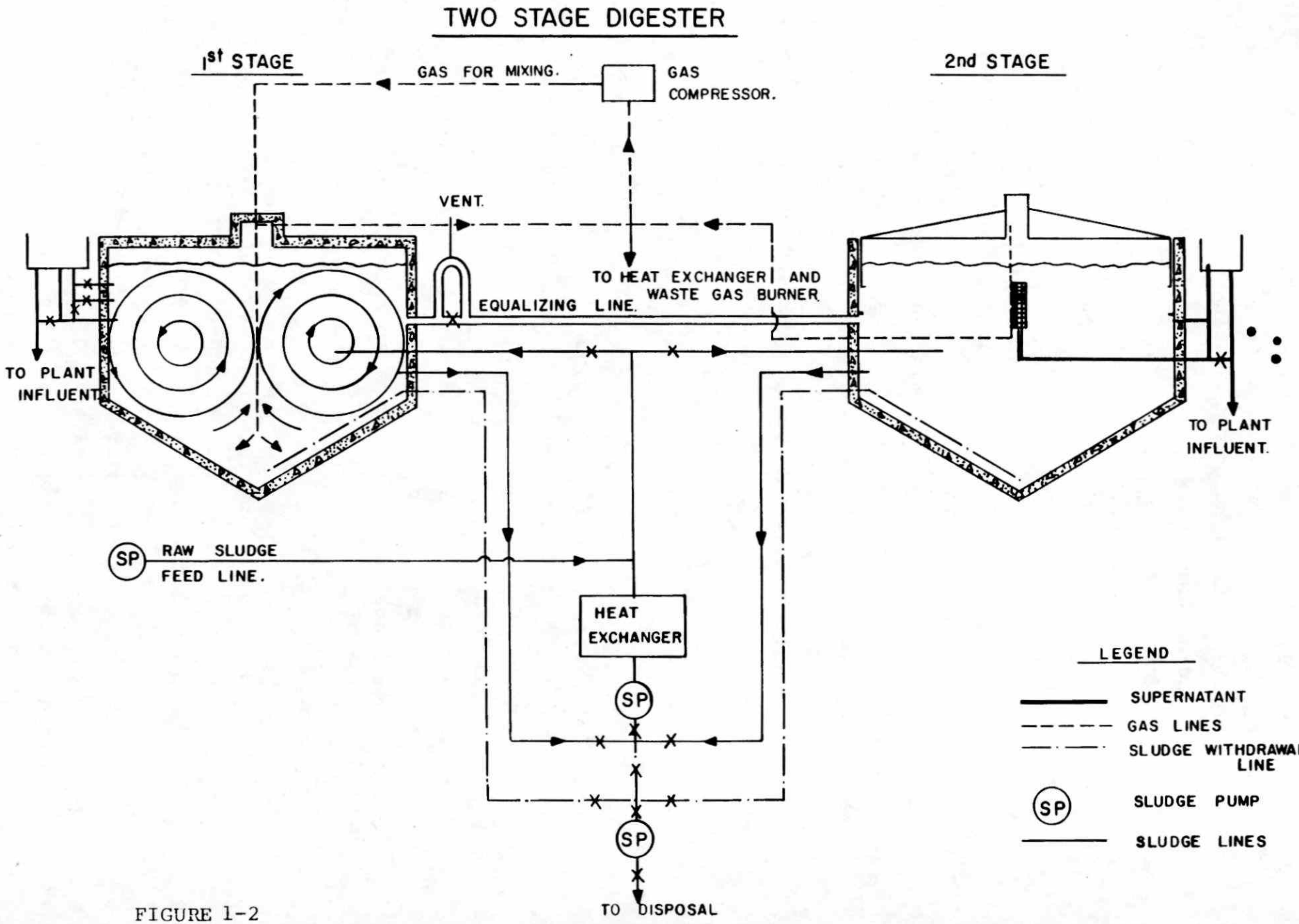
TWO STAGE DIGESTER
1st STAGE
GAS FOR MIXING.
GAS COMPRESSOR.
2nd STAGE
VENT.
TO HEAT EXCHANGER AND WASTE GAS BURNER
EQUALIZING LINE.
TO PLANT INFLUENT
TO PLANT INFLUENT.
SP
RAW SLUDGE FEED LINE.
HEAT EXCHANGER
SP
SP
TO DISPOSAL
LEGEND
SUPERNATANT
GAS LINES
SLUDGE WITHDRAWAL LINE
SP
SLUDGE PUMP
SLUDGE LINES

FIGURE 1-2

The digestion process is normally described as occurring in three steps, although these occur continuously and, for all practical purposes, simultaneously:

1. Acid fermentation
2. Acid regression
3. Alkaline fermentation

Acid Fermentation

During the acid fermentation stage, the organic matter is broken down to volatile fatty acids, primarily acetic, butyric and propionic acids, which results in a drop in pH and causes putrefactive odours. The organisms primarily responsible for this stage of digestion are the acid formers. As a rule, the acid formers are very vigorous reproducers and are less sensitive to environmental factors than the methane formers.

Acid Regression

During the acid regression stage, decomposition of volatile acids and soluble nitrogenous compounds occurs which result in the formation of the following principal compounds:

1. ammonia
2. amines
3. acid carbonates

During this stage the pH will tend to increase.

Alkaline Fermentation

During the alkaline fermentation stage, destruction of nitrogenous compounds and cellulose occurs. The volatile acids, produced during stage 1 of the process are broken down to produce carbon-dioxide (CO_2), methane (CH_4) and water. The principal organisms responsible for this process are the methane formers, a slower reproducing bacteria, and much more sensitive to their environment than the acid formers. To summarize, the anaerobic digestion process is shown pictorially in Figure 1-3.

ANAEROBIC DIGESTION PROCESS

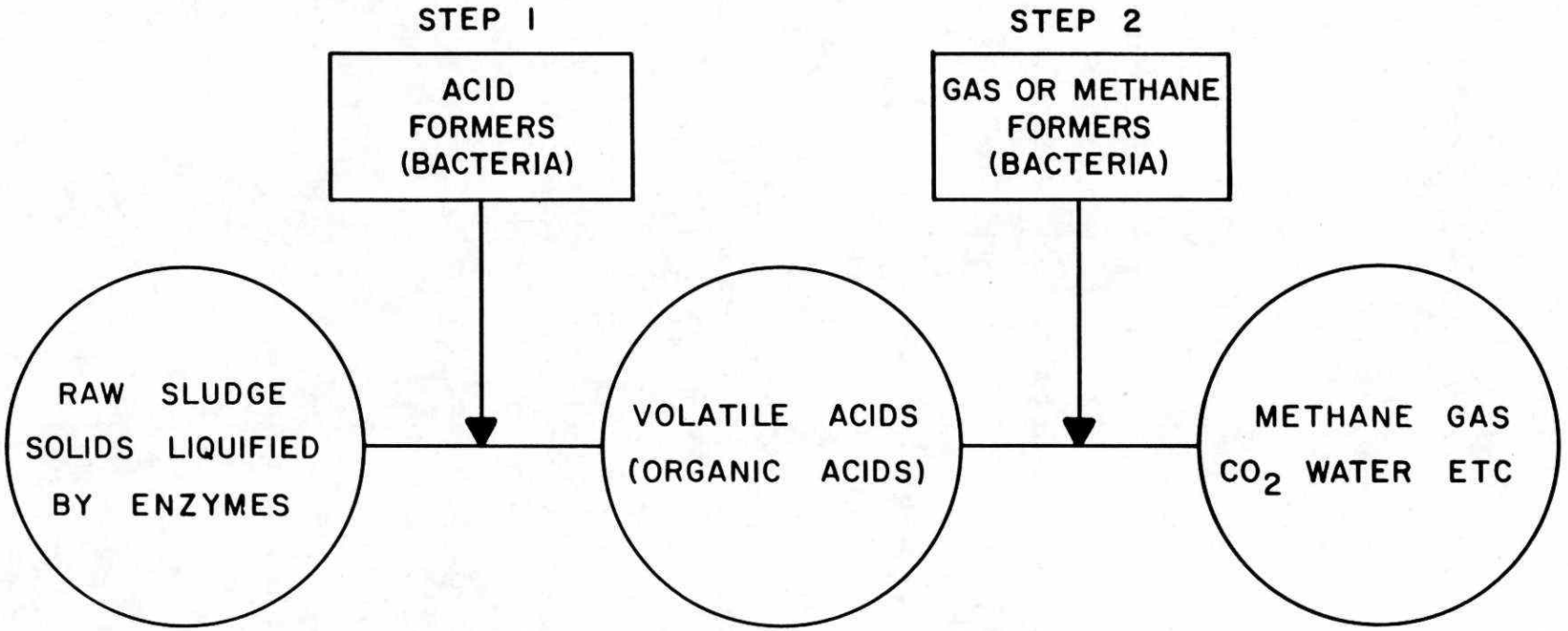

FIGURE 1-3

MIXING

Mixing is an important factor in the process and proper maintenance of the associated equipment is essential. Efficient mixing ensures effective digester operation and greatly speeds up the process. The main function of mixing is to:

1. Utilize as much of the total volume of the digester as possible.
2. Quickly distribute the raw sludge throughout the digester and put the microorganisms in contact with fresh food sources as quickly as possible.
3. Achieve good pH control by distributing buffering alkalinity throughout the digestion tank.
4. Obtain the best possible distribution of heat throughout the tank.
5. Minimize the deposition of grit and inert solids on the bottom or float scum material to the top.

Mixing can be accomplished by various means using:

1. mechanical mixers
2. digester gas recirculation

Some mixing action is also achieved by recirculating sludge through the heat exchanger.

Mechanical Mixing

The propeller-type mixers are found mainly on fixed-cover digesters. Normally, two or three of these units are supported on the roof of the tank. Explosion proof motors drive the mixers. A typical propeller-type mixer is shown in Figure 1-4. The draft tubes are steel and range from 18 to 24 inches in diameter. The top of the draft tube has a rolled lip and is located approximately 18 inches below the normal liquid level in the tank. The bottom of the draft tube may be straight or equipped with a 90-degree elbow. The 90-degree elbow type is placed so that the discharge is along the outside wall of the tank to create a whirlpool action.

The mixer propeller is located about two feet below the top of the draft tube. This type of unit usually has a reversible motor so that the propeller may be rotated in either direction. In one direction the contents are pulled from the top of the digester and forced down the draft tube to be discharged at the bottom. By operating the motor in the opposite direction, the digested sludge is pulled from the bottom of the tank and is then discharged over the top of the draft tube near the surface.

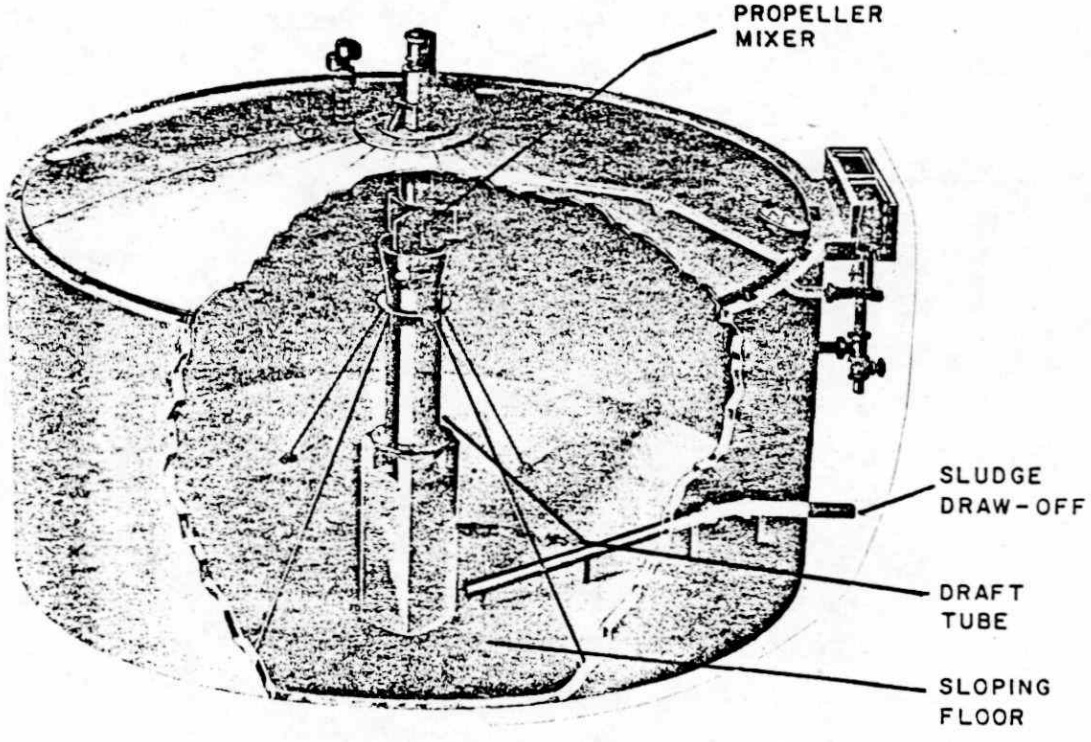

Figure 1-4 MECHANICAL MIXER
(COURTESY OF DORR-OLIVER, INC.)

Mechanical mixers are sometimes subject to shaft-bearing failure due to the abrasiveness of the sludge, and corrosion by hydrogen sulphide present in the digester gas. Maintenance consists of lubrication and, if belt-driven, adjustment of belt tension.

Sludge recirculation pumps are sometimes used to mix digesters. This method is common in smaller tanks. When external heat exchangers are utilized, a larger centrifugal pump is used to recirculate the sludge and discharge it back into the digester through one or two directional nozzles at the rate of about 200 to 1000 gpm. (900-4550 litres per minute)

Maintenance of the recirculating sludge pump requires normal lubrication and a good pump-shaft water sealing system. The digested sludge is abrasive and pump packing, shaft, wearing rings, and impellers are rapidly worn. Another problem associated with pump mixing is clogging of the pump impeller with rags, plastic and rubber materials which can wind around the impeller.

It is very important to check pump operation several times a day. Pressure gauges should be installed on the pump suction and discharge pipes. If a rapid increase in pressure differential is seen, the operator has an indication that pump clogging has occurred.

Mixing by Digester Gas Recirculation

In these systems the digester gas is fed from the gas dome of the digester, compressed in the blowers and fed to the gas lift mixing devices near the bottom inside the primary digesters. Mixing of the sludge is accomplished as the gas rises from the devices to the surface of the sludge.

Dual gas compressors, (100% standby), are usually supplied either in ventilated housing on the digester roof or in a separate gas pump room. The compressors which are a source of high maintenance, can be any type of positive displacement blower or vane-type compressor,with explosion proof motors and electrical auxiliaries. Ventilation of the pumproom is provided by hermetically sealed blowers and

motors to overcome the seal leakage problem.

The main types of gas lifting devices in common use are:

1. Bubble Guns
2. Central Mixing Draft Tube and Pipes
3. Gas Injection Pipes
   a. Roof mounted
   b. Floor mounted

Bubble Guns

The bubble gun system uses several gun assemblies located at the half-radius of the digester and evenly speced around the circle. The number of guns varies from 3 to 6 as the digester diameter increases from 40 to 110 feet. The gun (Fig. 1-5) consists of a 12-in. diameter vertical stack mounted on a tripod attached to the floor of the digester with a bubble generating device at its lower end. The gas fed into the generator exits every few seconds in large single bubbles that completely fill the stack and act as pistons to force the liquid above them to the surface. As the bubbles move up the stack, more liquid is drawn in behind them, continuing the gas lift pumping action.

Any maintenance on this system requires the digester to be taken out of service.

Central Mixing Pipes and Draft Tube

This system employs one large draft or eductor tube centrally located in the digester, with numerous 2-in. diameter gas pipes feeding fine bubble spargers at their lower end, (Fig. 1-6). The eductor tube diameter varies from 18 in. to 72 in. as the digester diameter increases from 40 to 110 ft. Since the gas is released at about half the digester depth, lower blower pressures are required than with other systems. There is the tendency for circulation short-circuiting with this system, particularly with larger digester diameters. Recent testing of a new installation in a 110-ft. diameter digester, indicated that only 50% of the contents were being mixed.

Gas Injection Pipes

The roof mounted injection pipe system employs several 2-in. diameter pipes, attached to the digester roof and extending down to within a foot of the digester floor. Compressed gas, escaping from the lower end of the pipe creates an area of less density and sets up a pumping action that circulates the sludge in the local area. The number of injection pipes varies from 5 to 12 as the digester diameter increases from 40 to 110 ft. The pipes are located at .6 to .75 of the digester radius from the centre, with one pipe near the centre (Fig. 1-7). Each injection pipe has a 4-in. diameter pipe surrounding the 2-in. pipe, extending downward into the sludge to form a gas seal (Fig. 1-7). The injection pipes can than be easily disconnected and removed for maintenance or replacement without taking the digester out of service. This system can also be assembled to a floating digester cover.

The floor mounted diffuser system offered by Chicago Pump consists of several diffusers bolted to the floor and grouped in the centre of the primary digester, with each diffuser being fed by a 1-in. diameter gas line. The number of diffusers varies from 6 to 16 as the digester diameter increases from 40 to 110 ft. The diffuser itself consists of a cast iron box, 7 inches square by 12 inches deep without a top, with the 1-in. gas line attached to one side and terminating 2-in. inside the box (Fig. 1-7). Any maintenance work would require complete dewatering and cleanout of the digester. Each gas feed line is piped to an orifice plate flowmeter in the gas room for balancing the gas volumes to each diffuser. Low compressor horse-power requirements are claimed for this System.

The above noted quantities and spacings of the mixing devices are as recommended by the equipment suppliers. One

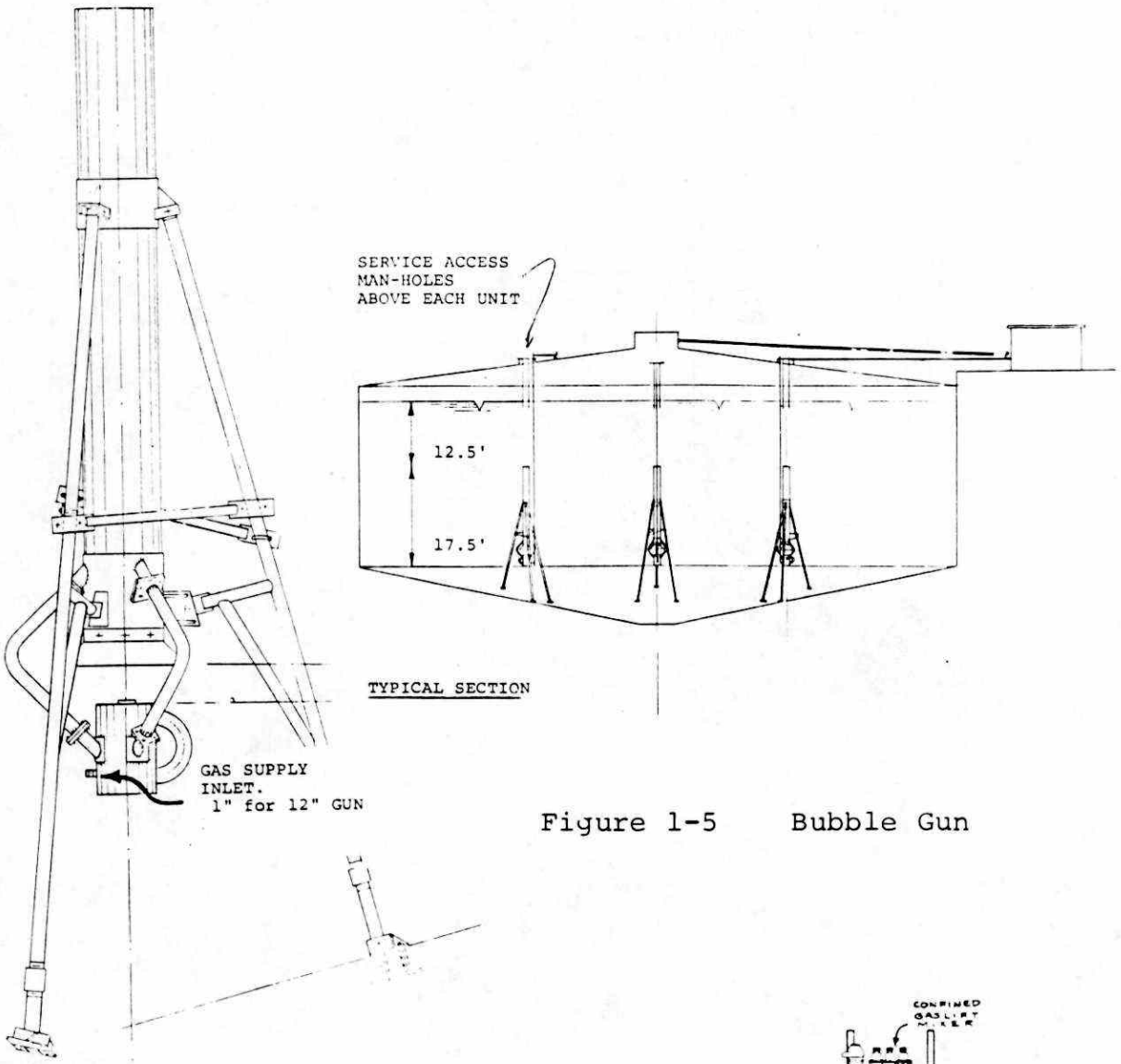

Figure 1-5 Bubble Gun

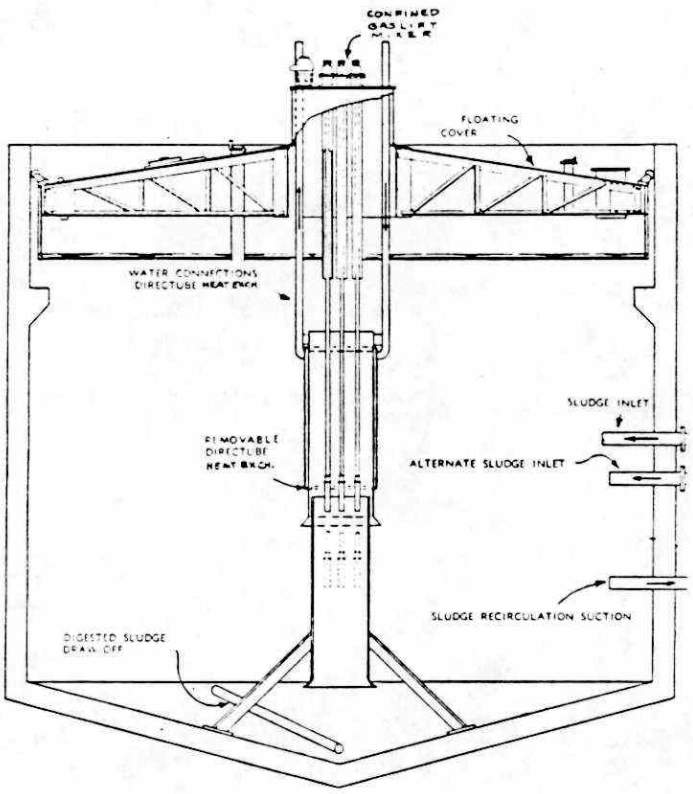

Figure 1-6
Central Mixing Draft Tube

Figure 1-7 Gas Injection Pipes

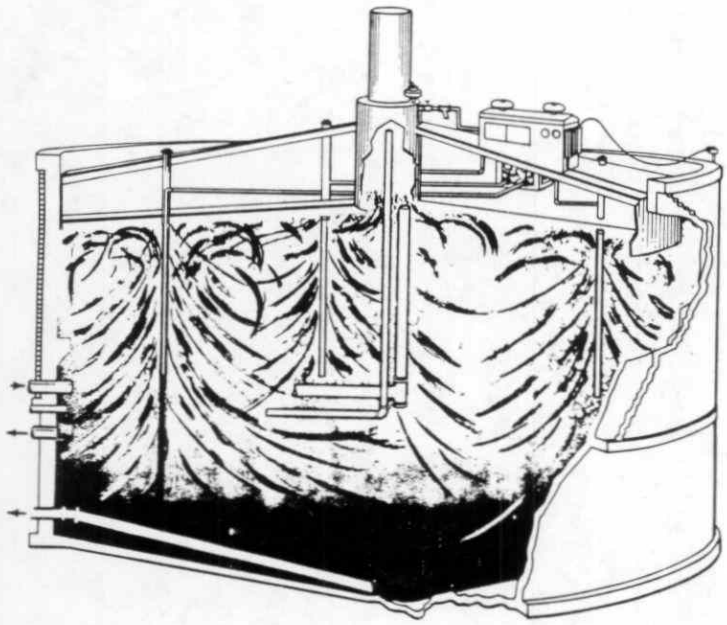

Roof Mount

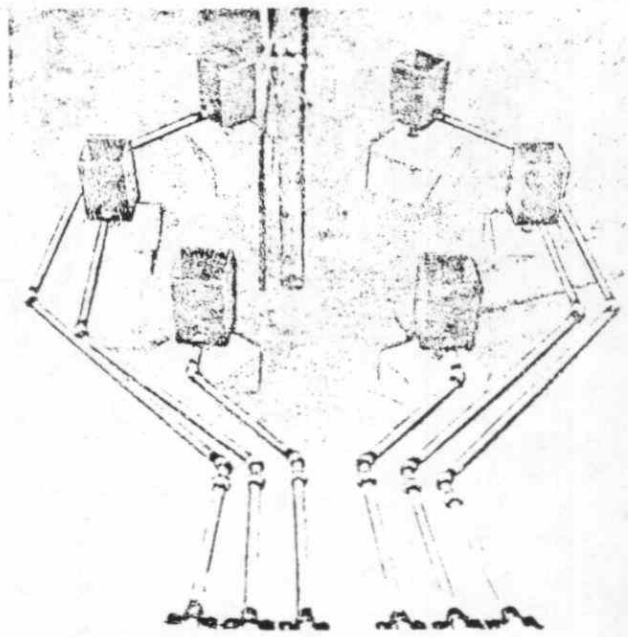

Floor Mount

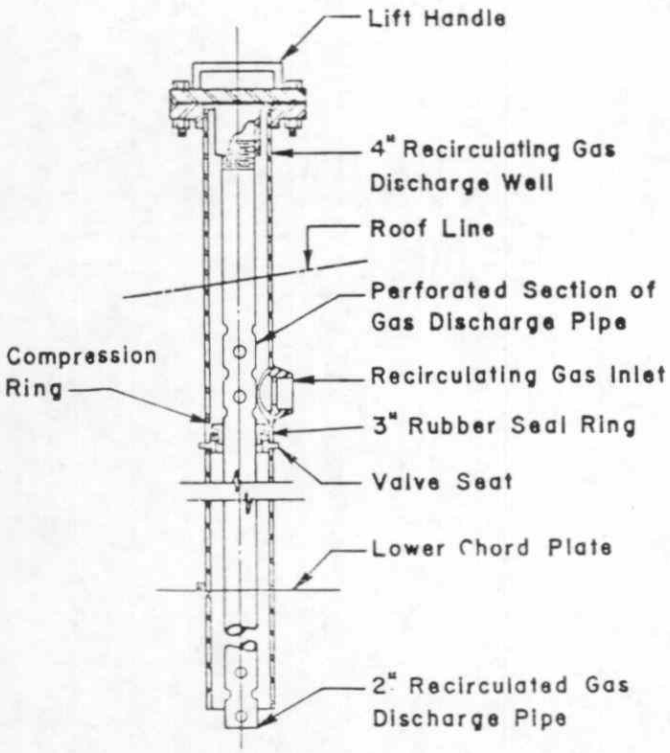

criteria for determining the mixing adequacy of a system is the horsepower expended per 1000 cu.ft. of volume. This figure now varies from 0.01 to 0.25 HP/1000 $ft.^3$ in existing installations. Operating experience to date indicates that all systems give inadequate mixing and further research in this direction is required.

All of the above systems have the advantage of no moving parts in the digester requiring maintenance. One supplier of gun-type mixers was offering 11 gauge metal in the stacks which rusted out in a few years. A minimum material thickness of .25 inches is now specified on new installations with some thought of changing to stainless steel to completely overcome the corrosion problem. Some systems have complicated rotary valves or solenoids on the gas supply lines to program the mixing devices on and off. Field experience indicates that mixing is inadequate in most digesters and full-time operation of all mixing equipment is the best method of operation. Gas lift equipment water pumping rates are usually determined by tests using clean water and it is not clear what factors should be used to de-rate the equipment when handling sludges of 3% to 10% or more, solids. Provision should be made for expansion and flexibility in the gas supply lines. Sometimes if the gas supply lines are mounted on the digesters metal roof and the bubble guns are attached to the floor, the gas lines will break off at the guns, because of the vertical expansion of the metal roof.

HEATING SYSTEMS

Digester heating, another important factor in the process, can be accomplished by:

1. Hot-water coils within the digester.
2. Recirculating sludge through an external heat exchanger
3. Direct contact of hot gas with sludge.
4. Steam injection.

See Figure 1-8.

EXTERNAL HEAT EXCHANGERS

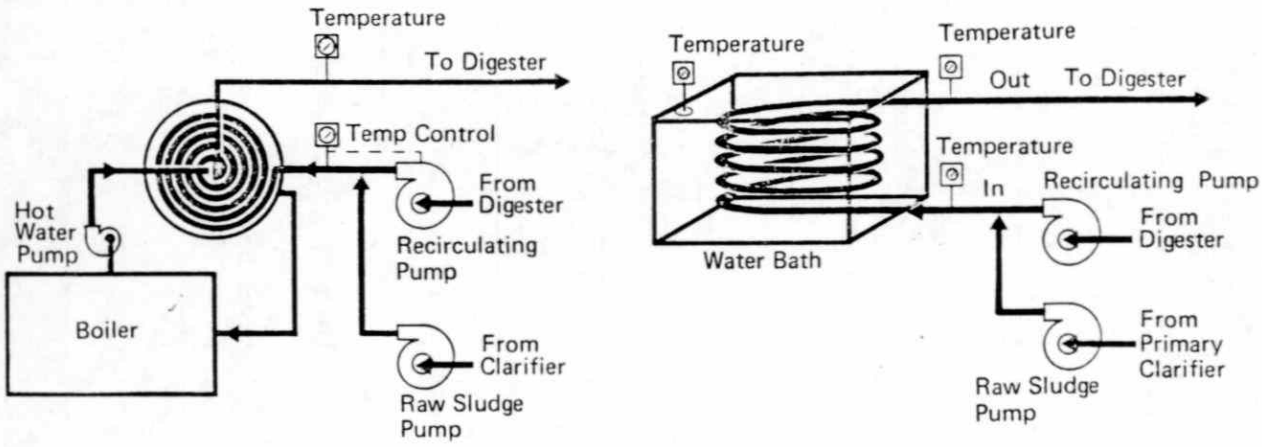

INTERNAL HEAT EXCHANGERS

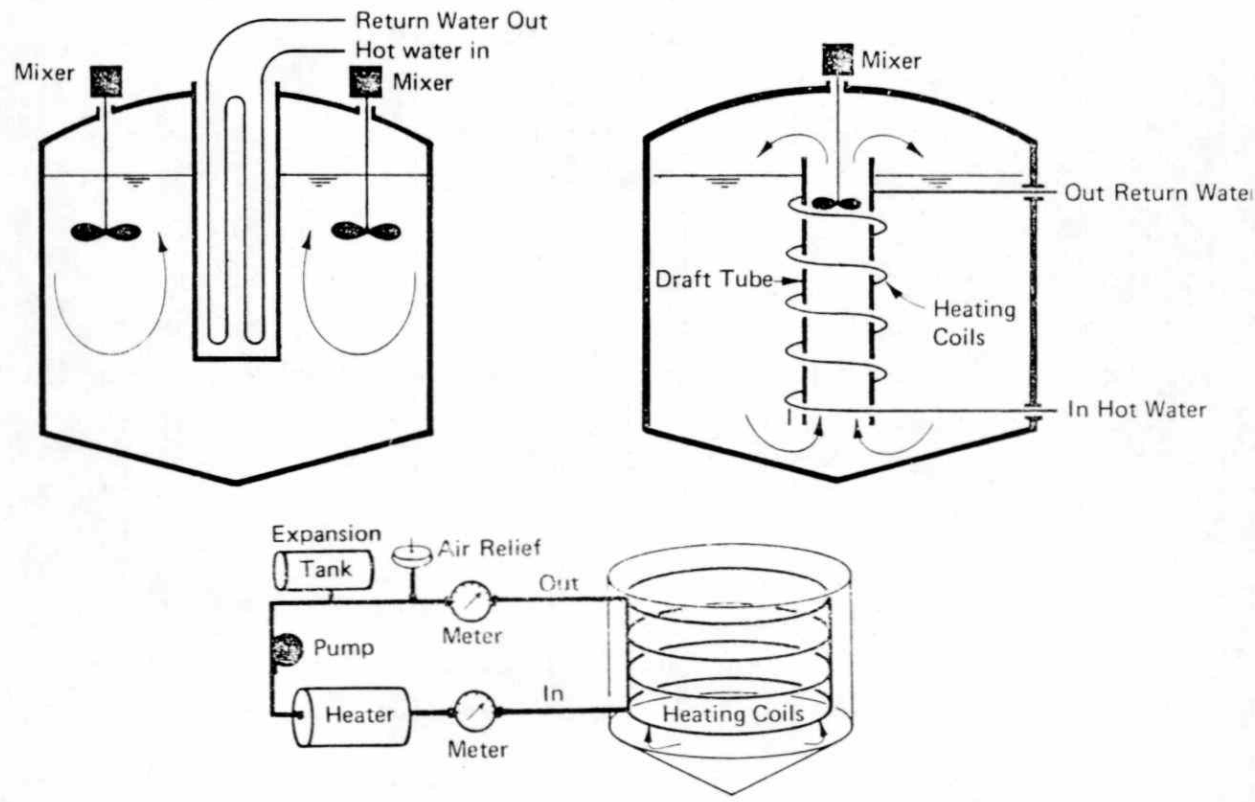

FIGURE 1-8 HEAT EXCHANGERS

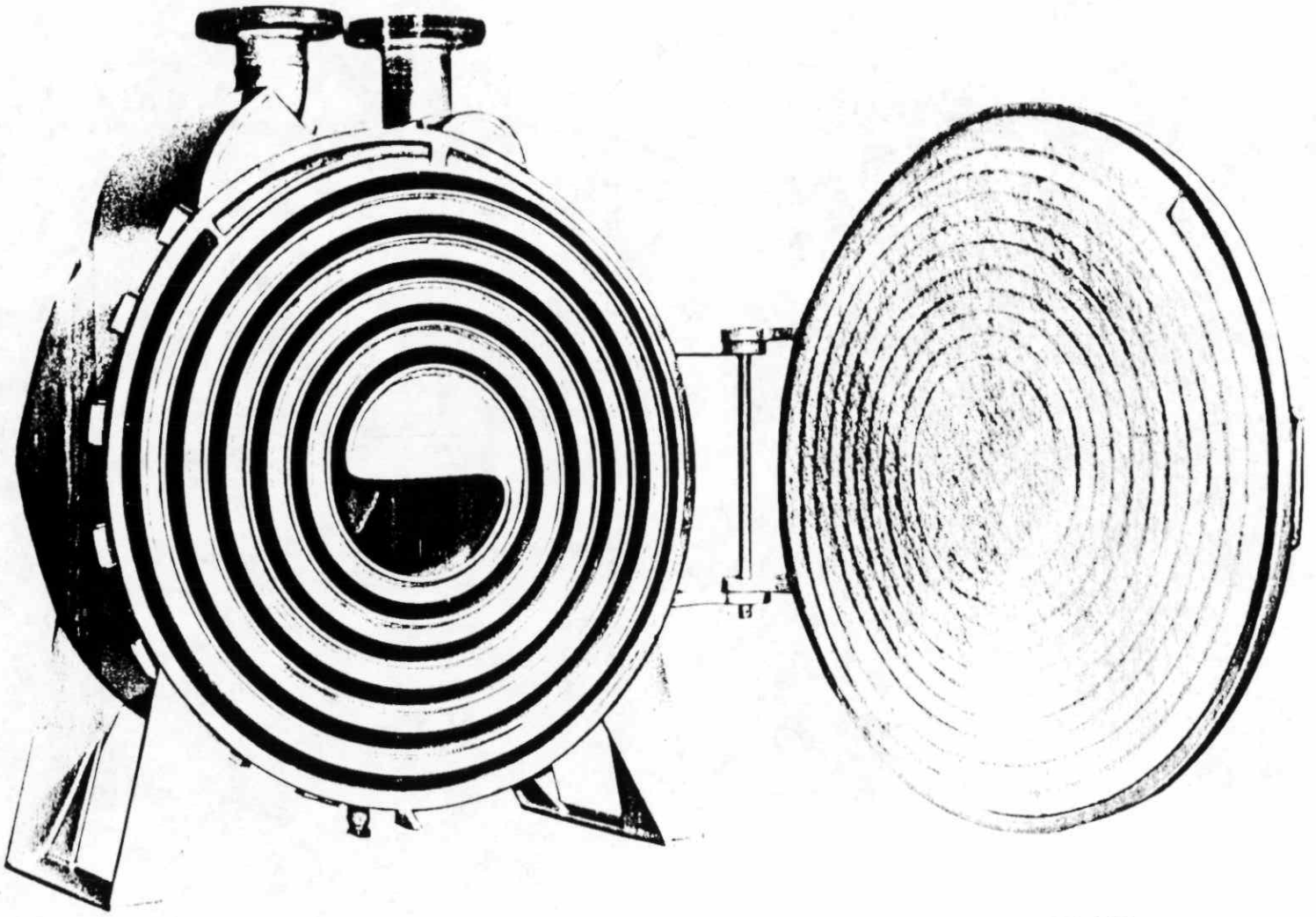

FIGURE 1-9 SPIRAL HEAT EXCHANGER

External Heat Exchanger

The most common system is the recirculation of sludge through an external heat exchanger. See Figure 1-9. Hot water is pumped from the boiler to the heat exchanger where it passes through a jacket while the recirculating sludge passes through an adjacent jacket, and receives heat from the water Figure 1-10.

In some heating installations the boiler and exchanger are combined in a single unit. There is some advantage in using external heat exchangers, as they help to control scum buildup and there is no hot water piping within the digester which can be corroded or caked up. The only disadvantage is that in a single stage digester system it is essential to stop sludge recirculation to allow the tank contents to stratify prior to the discharge of supernatant. This can result in an increased tendency to form a "cake" on the exchanger coils, or jackets due to localized overheating of the sludge.

Hot-Water Coil

Hot-water coils within the digester consisting of pipes either horizontally or vertically attached to the inside wall of the digester is another method of heating digesters, although not too common in newer plants. This method tends to create a problem fo sludge caking on the pipes and thereby effectively insulating them, thus reducing the amount of heat transferred. Where coils are used water temperatures entering the coils are limited to a temperature of 49° to 54°C with boiler temperatures held to no higher than 82°C to prevent excessive corrosion or caking of the sludge on the coils.

Direct Contact and Steam Injection

Direct contact of hot gas with sludge by steam injection methods have been used in the past with varying degrees of success. However, these systems are rarely installed in current practice.

SUBJECT:

DIGESTER GAS SYSTEM

TOPIC: 2

COMPONENTS

OBJECTIVES:

The trainee will be able to:

1. Identify components of a typical low pressure digester gas collection system.
2. Recall the function of each component of a digester gas collection system.
3. Recall the maintenance requirements for components of a typical digester gas collection system.
4. Carry out an inspection of a digester gas system to determine maintenance requirements.

COMPONENTS

DIGESTER GAS COLLECTION SYSTEM

GENERAL

As a result of the digestion process, digester gas is collected in the dome of the digester and is transferred to its point of use through piping along which are installed various safety devices, condensate collectors, pressure regulators and metering systems. The low pressure gas (5-9 in. water column) is usually used as a fuel for boilers or vented through a waste gas burner to atmosphere. In larger installations, the low pressure gas may be compressed and stored in a large gas receiver to be used in dual fuel engines (which drive electrical generators) whose requirements are generally in the order of 30 psi or greater.

A schematic diagram of a multiple digester gas system is shown in Figure 2-1.

COMPONENTS

Digester Covers

The cover on the digester serves several purposes:-

1. As a superstructure for mixing equipment.
2. Support for safety devices - pressure and vacuum relief valves, flame arrestor.
3. As a gas dome for the accumulation and collection of gas; storage space for gas produced.

There are three major types, fixed, floating and gas holder.

The fixed cover, Figure 2-2, may be concrete or metal. It can be seriously damaged if the pressure relief valve fails, supernatant overflow line plugs and the liquid level continues to rise. Pressure inside the tank can lift the cover off the walls, necessitating tank draining and expensive repairs. A water seal may be used to protect the tank. If excess pressure builds up, the gas will escape around the water seal.

FIGURE 2-1 : TYPICAL DIGESTER GAS SYSTEM

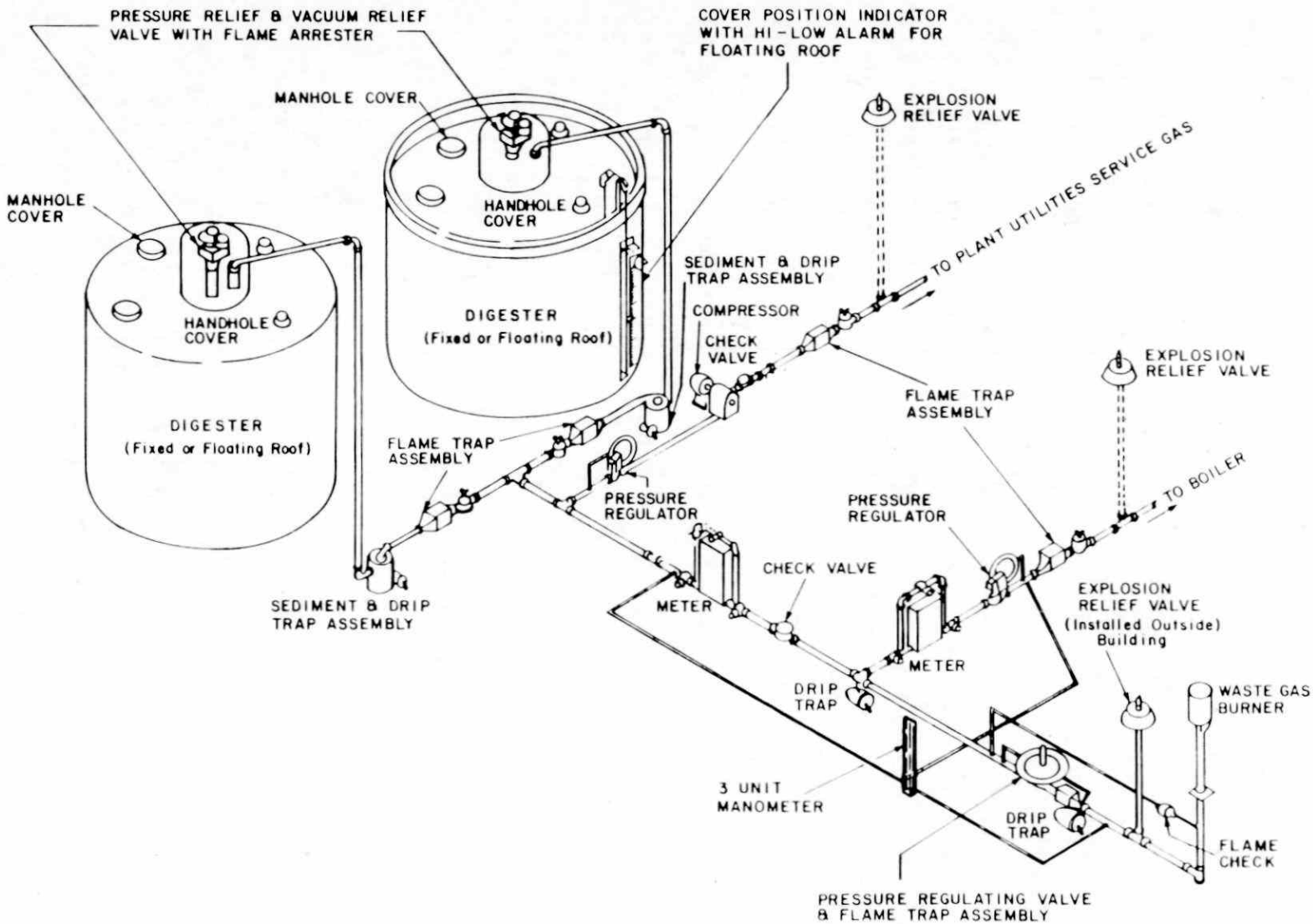

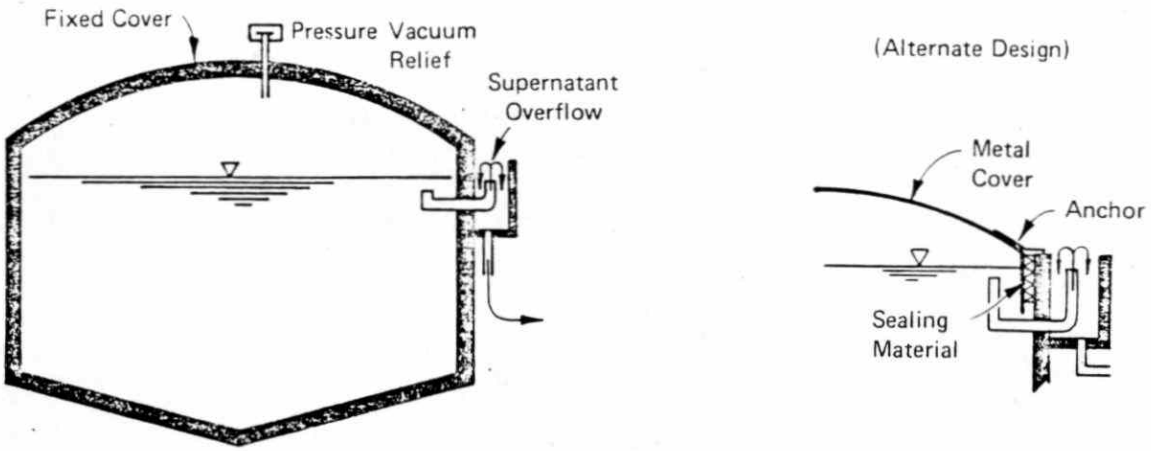

FIGURE 2-2 FIXED COVER

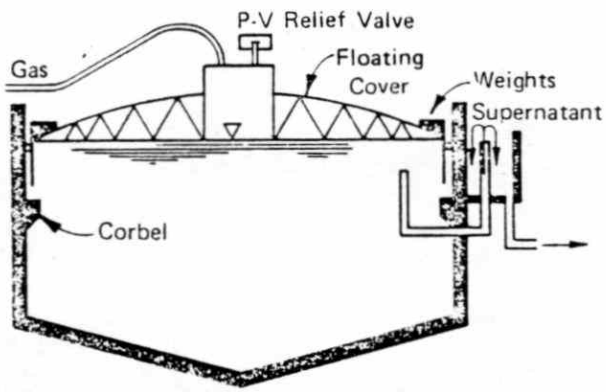

FIGURE 2-3 FLOATING COVER

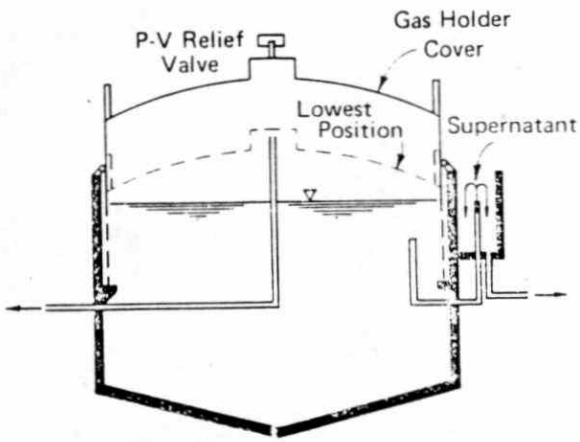

FIGURE 2-4 GAS HOLDER COVER

If a vacuum develops, air enters the tank breaking the seal.

The floating cover, Figure 2-3, is subject to the same hazards as the fixed cover. The cover floats on the surface of the sludge rising or falling as the level changes. Roller guides must be maintained in smooth operating condition. If an excessive amount of sludge is pumped in, the cover can be floated over the wall. They may also collapse if the vacuum relief valve fails. This type of failure is most prevalent during freezing weather.

The gas holder cover, Figure 2-4, is used to store gas as it is produced. The pressure developed inside the tank causes the cover to lift as much as six feet or more above its minimum height. It has a much longer skirt than the floating type.

After a digester clean out, the digester roof should be checked internally and externally for corrosion. The rods and braces should be checked and repaired where required. Internal piping should be checked and repaired where necessary. Mixing equipment, mechanical or gas re-circulation, should be checked and repaired if required. Free movement of floating roofs should be checked.

After all equipment has been maintained, the digester should be filled with water to the operating level, the Pressure and Vacuum Relief Valve removed and the opening blanked off. The digester should now be brought up to 1 1/2 times its operating pressure by either air pressure or raising the water level to a higher level or both.

See Appendix C, Topic 7 for test procedures.

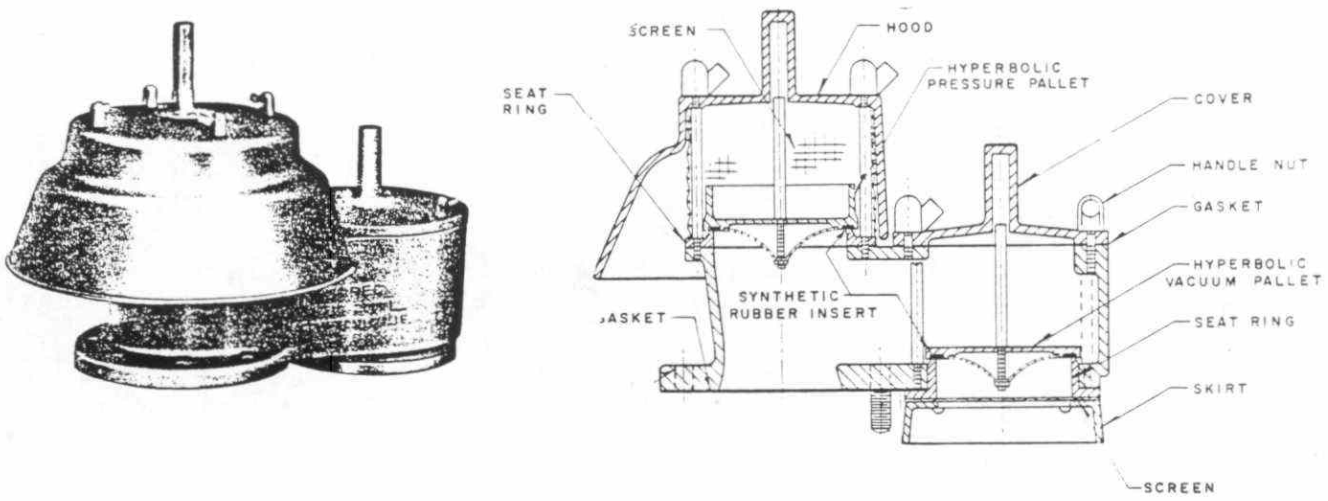

FIGURE 2-5 PRESSURE AND VACUUM RELIEF VALVES

Pressure Relief and Vacuum Relief Valves

On the roofs of the digesters there are pressure and vacuum relief valves. The valves are installed to prevent damage to the roof by excessive pressure or vacuum. For example, should it be necessary to perform maintenance upon flame arresters, meters, or other gas equipment, a plug valve may be closed up-stream to isolate the section under maintenance or repair. The gas produced constantly in the digester then has nowhere to go and exerts pressure on the digester roof. The pressure relief valve, usually set to open at around 10-15 inches of water column, will open when the roof pressure reaches this level and vent the gas to the atmosphere for the duration of the maintenance period.

The pressure relief valve and the vacuum relief valve (Figure 2-5) are attached to a common pipe, but each works independently. The pressure relief valve is equipped with a seat and weighted with lead washer weights. Each weight is stamped with its equivalent water column height such as "1" H_2O or 3" H_2O." There should be sufficient weights, combined with the weight of the pallet, to equal the designed holding pressure of the tank. To calculate the weight requirements see

Appendix A. The gas pressure is normally retained between six inches and eight inches of water. If the gas pressure in the tank exceeds the upper limit setting, then the valve will open and vent to the atmosphere, through the pressure relief valve. This should occur before the water seal blows out.

On some occations when digested sludge is being trucked away, or when there is a sharp drop in temperature, it is not always possible to maintain gas pressure in the digesters and a slight vacuum may be exerted on the roofs. At these times the vacuum relief valve opens, admitting some air to equalize pressure. Occationally there are manual valves installed upstream of the pressure and vacuum relief valve. This is a design defect as it is potentially very dangerous should the manual valve be left closed through oversight. Where these valves are installed, they must be removed as this is a listed prohibitive practice in accordance with Code CAN 1-B105-M81 Installation Code for Digester Gas Systems.

The vacuum relief valve operates similarly to the pressure relief valve except that it relieves negative pressure to prevent the tank for collapsing. Unnecessary manual operation of either valve is undesirable. Digester gas will mix with air and possibly lead to an explosion, outside the tank if the pressure relief valve is opened, and inside the tank if the vacuum relief valve is opened.

These two valves should be inspected at least every three months for proper operation. These must be dismantled and inspected yearly. Valve faces, seats, guides, spring tension and weights should be inspected, repaired or adjusted as necessary.

Flame Arrestors

A typical flame arrestor is a rectangular box holding approximately 50 to 100 corrugated aluminum plates with punched holes. If a flame should develop in the gas line, it would be cooled below the ignition point as it attempted to pass through the baffles, but gas could flow through with little loss in pressure. See Figure 2-6.

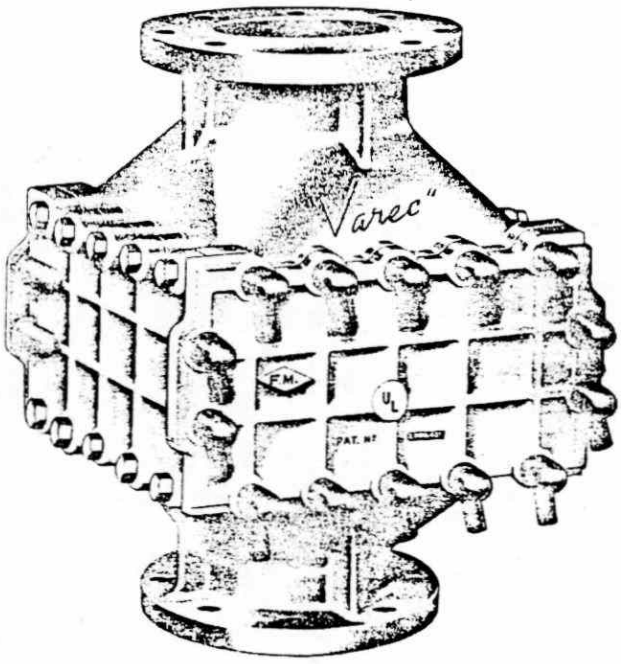

VERTICAL TYPE

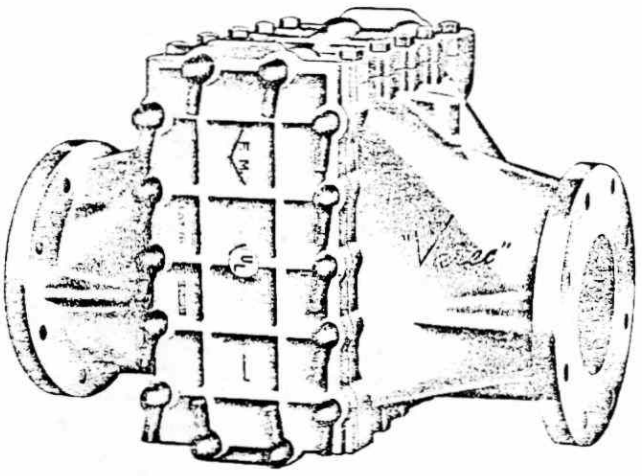

HORIZONTAL TYPE

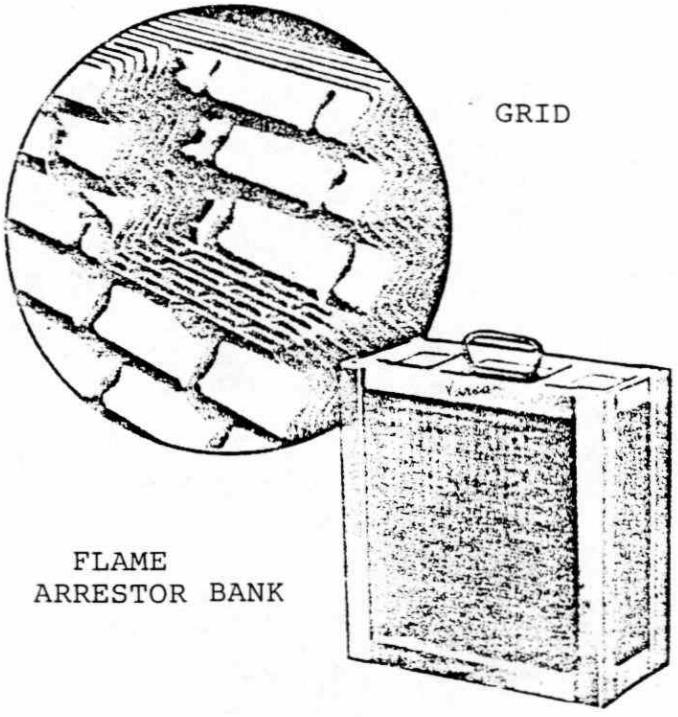

GRID

FLAME
ARRESTOR BANK

FIGURE 2-6 FLAME ARRESTOR

When coupled with a thermal valve, Figure 2-7, the assembly is called a flame trap assembly.

To prevent explosions, flame arrestors should be installed:

1. *Between the vacuum and pressure relief valves and the digester dome.*
2. *After the sediment trap on the gas line from digester.*
3. *At the waste gas burner.*
4. *Before every boiler or furnace.*

Flame arrestors should be serviced every three months by valving the gas off, pulling one end plate, and sliding the baffle cartridge out of the housing. A build-up of scale, salts from condensate, and residue build-up on the plates restricts gas flow.

The cartridge in the flame arrestor is designed to slide open so the baffles may be separated and washed without complete dismantling. When the unit is reassembled it should be tested for leaks by swabbing a soapsuds solution over potential leaky areas and inspecting for bubbles.

Thermal Valves

Another protective device always installed near a flame source and near the gas dome is a thermal valve. See Figure 2-7. This valve is round, with a weighted seat attached to a stem. The stem sits on a fusible plug of wax or metal, holding the seat up. If heat is generated by a flame, the fusible element melts at 260°F (125°C) and drops the stem and valve seat to cut off gas flow. Most valves are equipped with a wing nut on top of the valve body. If the wing nut is removed, it uncovers a glass tube which shows visually if the stem is up. If the stem cannot be seen, then the valve is removed and heated in boiling water to remove the melted fusible slug. A new slug is installed (slightly larger than an aspirin tablet), the stem replaced on top of it, and the valve is ready for service. These valves should be dismantled at least once a year to ensure that the stem is free to fall and not gummed up with residue or scale from the gas.

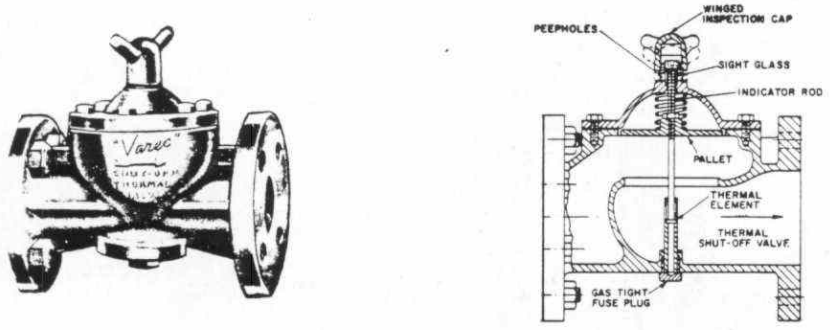

FIGURE 2-7 THERMAL VALVE

Sediment Traps

A sediment trap is a tank 12 to 15 inches in diameter and two to three feet in height. See Figure 2-8. The inlet gas line is near the top of the tank and on the side. The outlet line comes directly from the top of the sediment tank. The sediment trap is also equipped with a perforated inner baffle, and a condensate drain near the bottom. The gas enters the side at the top of the tank, passes down and through the baffle, then up and out the top. Moisture is collected from the gas in the trap, and any large pieces of scale are trapped before entering the gas system. The trap should be drained of condensate frequently but may have to be drained twice a day during cold weather, because greater amounts of water will condense and accumulate.

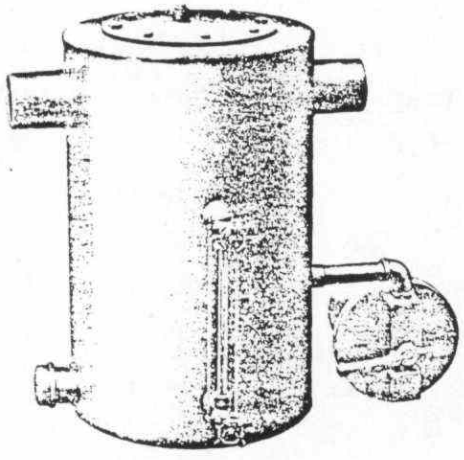

FIGURE 2-8 SEDIMENT TRAP
WITH DRIP TRAP

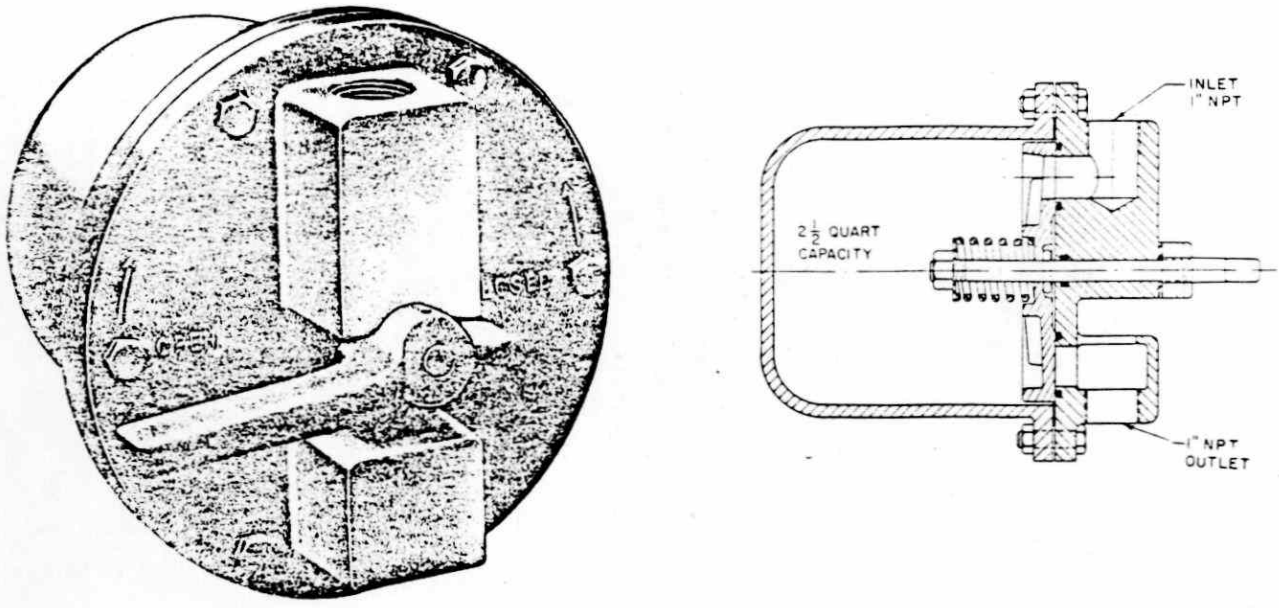

FIGURE 2-9 DRIP TRAP - ROTATING DISC TYPE

Drip Traps - Accumulators

Digester gas is quite wet and in traveling from the heated tank to a cooler temperature the water condenses. The water must be trapped at low points in the system and removed, or it will impede gas flow and cause damage to equipment such as compressors, and interfere with gas utilization. Traps are usually constructed to have a storage space of one to two quarts of water. All drip traps on gas lines should be located in the open air and be of the manual operation type. Traps should be drained at least twice a day and possibly more often in cold weather. Automatic drip traps are not recommended because they are equipped with a float and needle valve orifice. Corrosion, sediment, or scale in the gas system can keep the needle from seating. The resulting leaks may create gas concentrations with a potential hazard to life and equipment. See Figure 2-9

The accumulators are simply large drums installed in piping systems, which allow the gas to expand momentarily before continuing to flow downstream. Expansion results in a decrease in gas temperature, causing the moisture to condense and collect in the accumulator.

Water accumulators must be equipped with a manual drip trap or have other means of draining which will maintain a reliable gas seal.

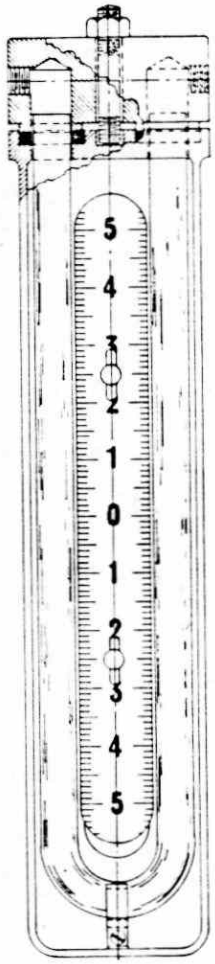

U TUBE

TYPE

FIGURE 2-10

MANOMETERS

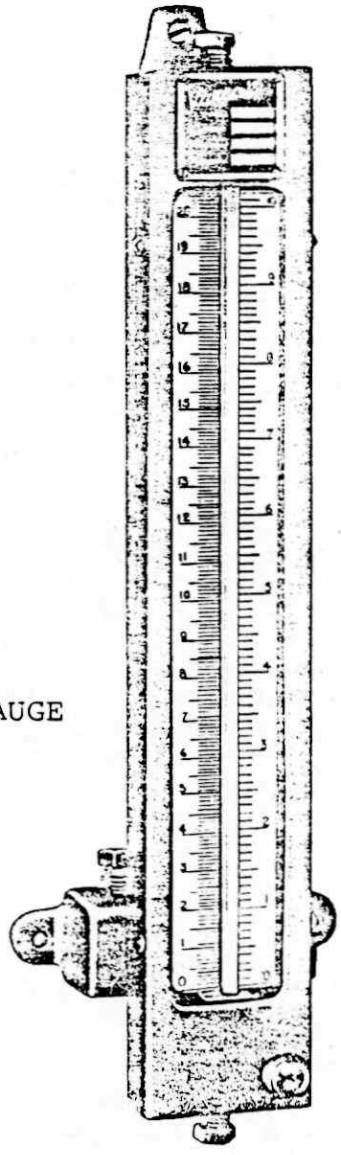

WELL TYPE

PRESSURE GAUGE

Manometers

Manometers are installed in the gas piping system, usually on the digester gas line, the service line to the boiler, and the line to the waste gas burner. See Figure 2-10. The manometers are normally oil filled and read pressure in inches of water column. Readings should be noted and recorded daily. The manometer readings are useful in showing what is occurring in the gas system.

Pressure Regulators

Pressure regulators, Figure 2-11, are placed at various points in the system to regulate the gas pressure to boilers, heaters, compressors and engines. These gas valves are sensitive and automatically operated. They are controlled by balancing the line gas pressure on one side of the diaphragm against spring or lead weight pressure on the other side. Stop valves should normally be installed in upstream and downstream piping and in the control lines to the regulator to allow the unit to be taken off line for maintenance purposes.

Regulators are normally preset to operate at the user's specified setting. If adjustments are required the procedures in the manufacturer's literature should be followed.

Regulators require very little maintenance. At least annually, lift the cover over the linkage and inspect the parts for easy operation by manually moving the weight arm. During day to day operations, performance of the regulator can be checked by observing the system pressure.

Pressure Regulator Valve and Flame Trap Assembly

This unit, Figure 2-12, is normally installed in the waste gas burner line to control the plant gas pressure allowing any excess gas to be released to the waste gas burner.

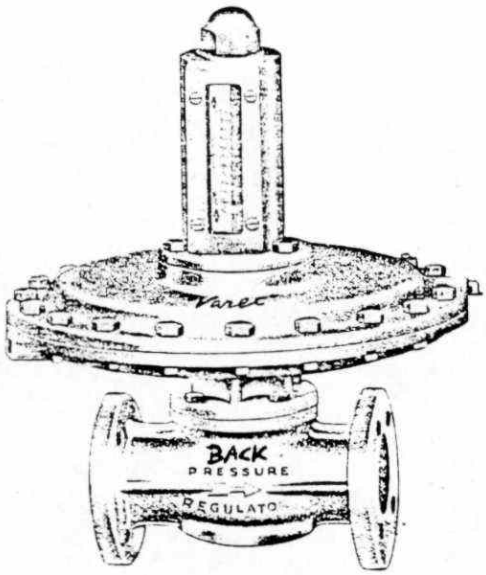

BACK PRESSURE SINGLE PORT FOR
UPSTREAM PRESSURE CONTROL

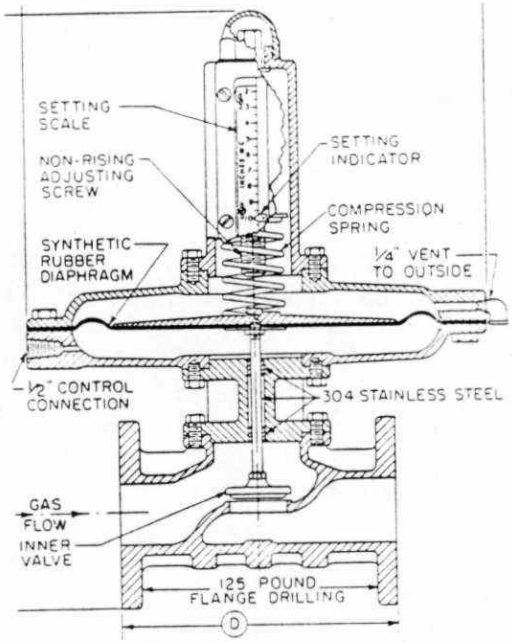

SECTIONAL ELEVATION

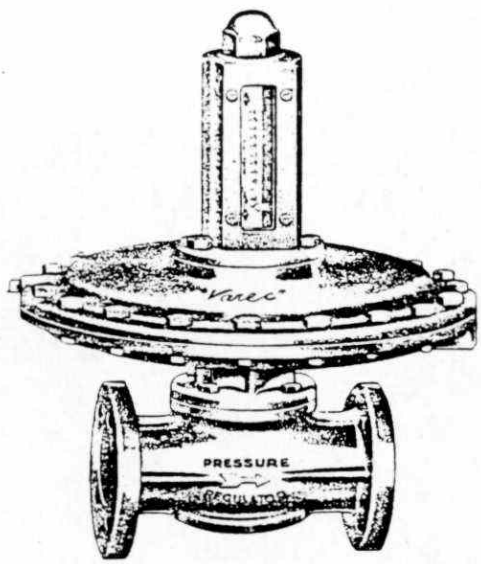

PRESSURE (REDUCING) SINGLE PORT
FOR DOWNSTREAM PRESSURE CONTROL

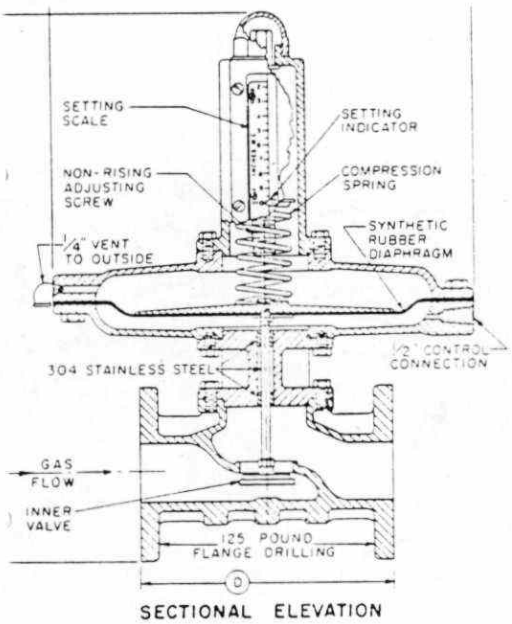

SECTIONAL ELEVATION

FIGURE 2-11 REGULATORS

The valve is set at the desired pressure, usually 5-9 inches water column, and will continue to release at this pressure. Whenever an adjustment of a pressure setting is made, the proper range of gas system pressure must be checked with a manometer. If the gas pressure in the system is below eight inches of water column, no gas flows to the waste burner. When the gas pressure reaches eight inches of water column, the valve opens slightly, allowing gas to flow to the burner. If the pressure continues to increase, the valve opens further to compensate. The only maintenance this unit requires is on the thermal valve on the discharge side which protects the system from back flashes. This unit is spring loaded and controlled by a fusible element that vents one side of the diaphragm, thus stopping the gas flow when heated. Maintenance includes checking for proper operation of the valve and of the fusible element.

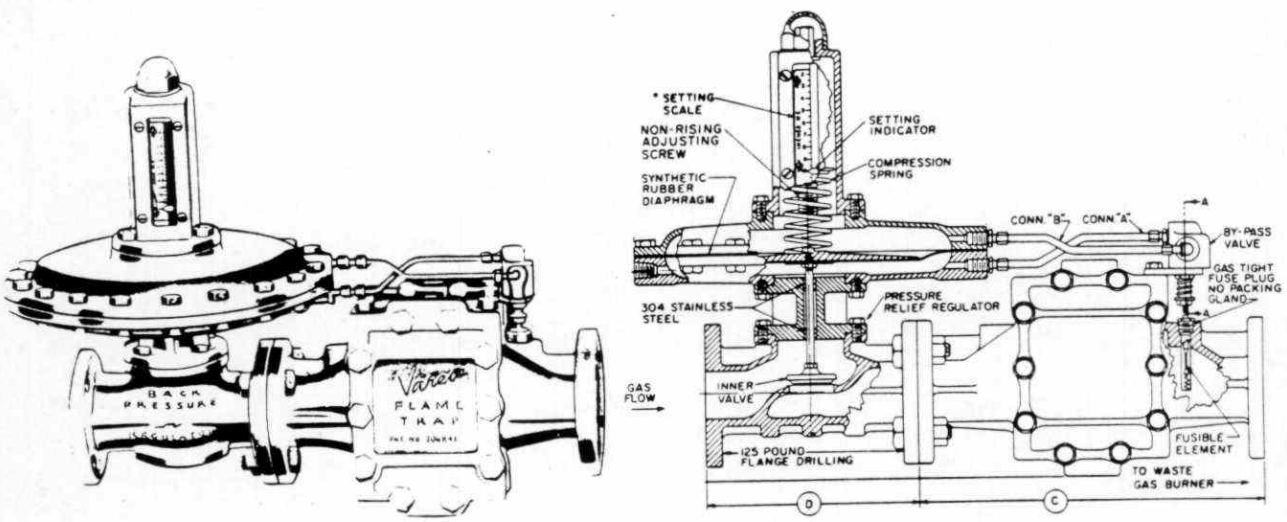

FIGURE 2-12 PRESSURE REGULATING VALVE AND FLAME TRAP ASSEMBLY

Flame Checks

Flame checks, Figure 2-13, are used to prevent flash-back in small lines carrying inflammable gases. They are

commonly installed in small pilot lines. The flame element consists of compressed wire gauze with free area sufficiently large to provide a minimum pressure drop with maximum fire protection.

The flame check is a union type fitting which permits easy removal of the flame arresting element for inspection and cleaning.

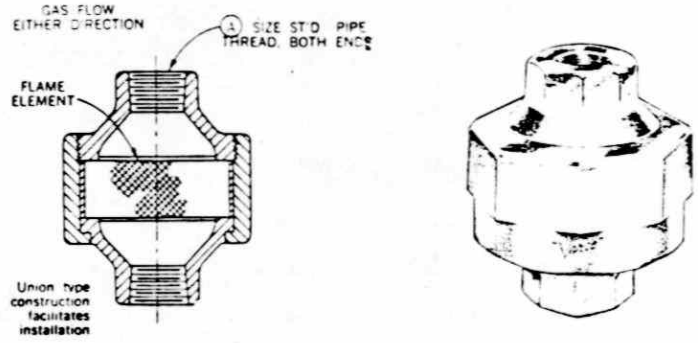

FIGURE 2-13 FLAME CHECKS

Back Pressure Check Valves

These are designed specifically for low pressure gas lines where minimum pressure drop with maximum flow capacity is required. Usually installed downstream of meters, regulators and other gas control devices that might be damaged by an accidental backflow of the gas in the system. See Figure 2-14.

The check valve is of heavy cast aluminum and is equipped with a free swinging pendulum type pallet. The seat ring and pallet are removable. A removable cover is provided for access to the internal parts.

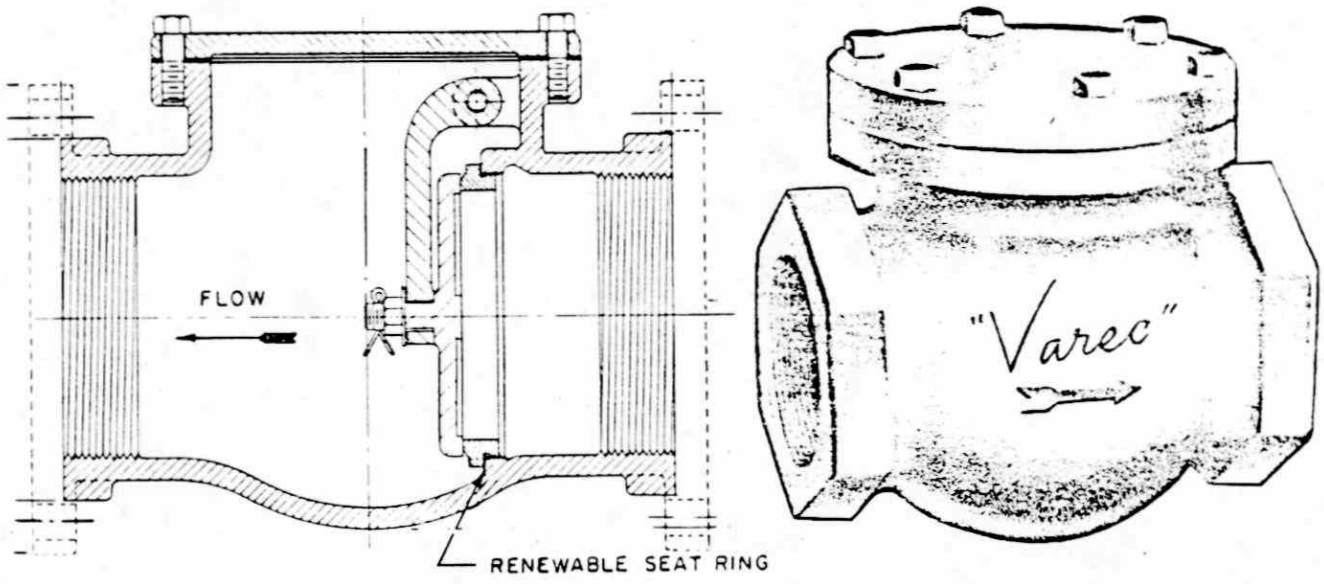

FIGURE 2-14 CHECK VALVE

Explosion Relief Valve

Explosion relief valves, Figure 2-15, are designed to provide emergency excess pressure relief in gas lines leading to waste gas burners, boilers engines, incinerators,storage tanks and low pressure vessels. Flashback explosion pressure is relieved ensuring protection to major equipment in the gas system.

The pallet is dead weight loaded and includes a replaceable synthetic rubber seat insert to ensure gas tight seating. Spring loaded pallets are available to permit higher pressure ranges than available with the dead weight loaded design.

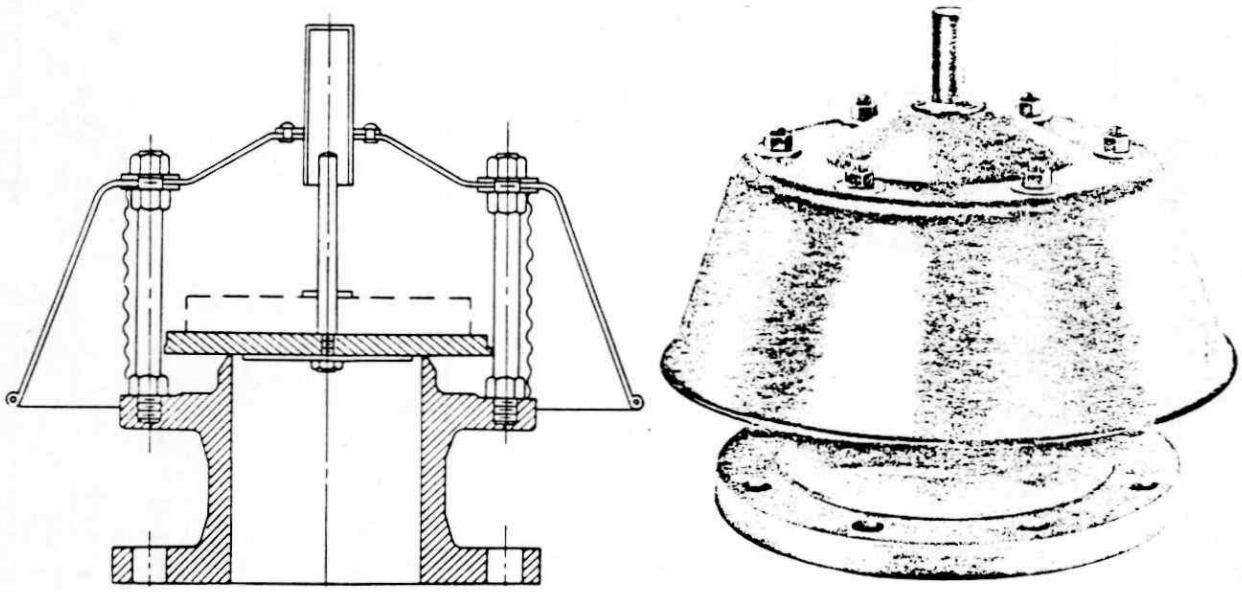

FIGURE 2-15 EXPLOSION RELIEF VALVE

Waste Gas Burner

Waste gas burners are used to burn the excess gas from the digestion system. The waste gas burner is equipped with a continuous burning pilot flame, so that any excess gas passing through the gas regulator will be burned. The pilot flame should be checked daily to be sure that it has not been blown out by wind. If the pilot is out, gas will be vented to the atmosphere creating an odorous and potentially explosive condition. See Figure 2-16.

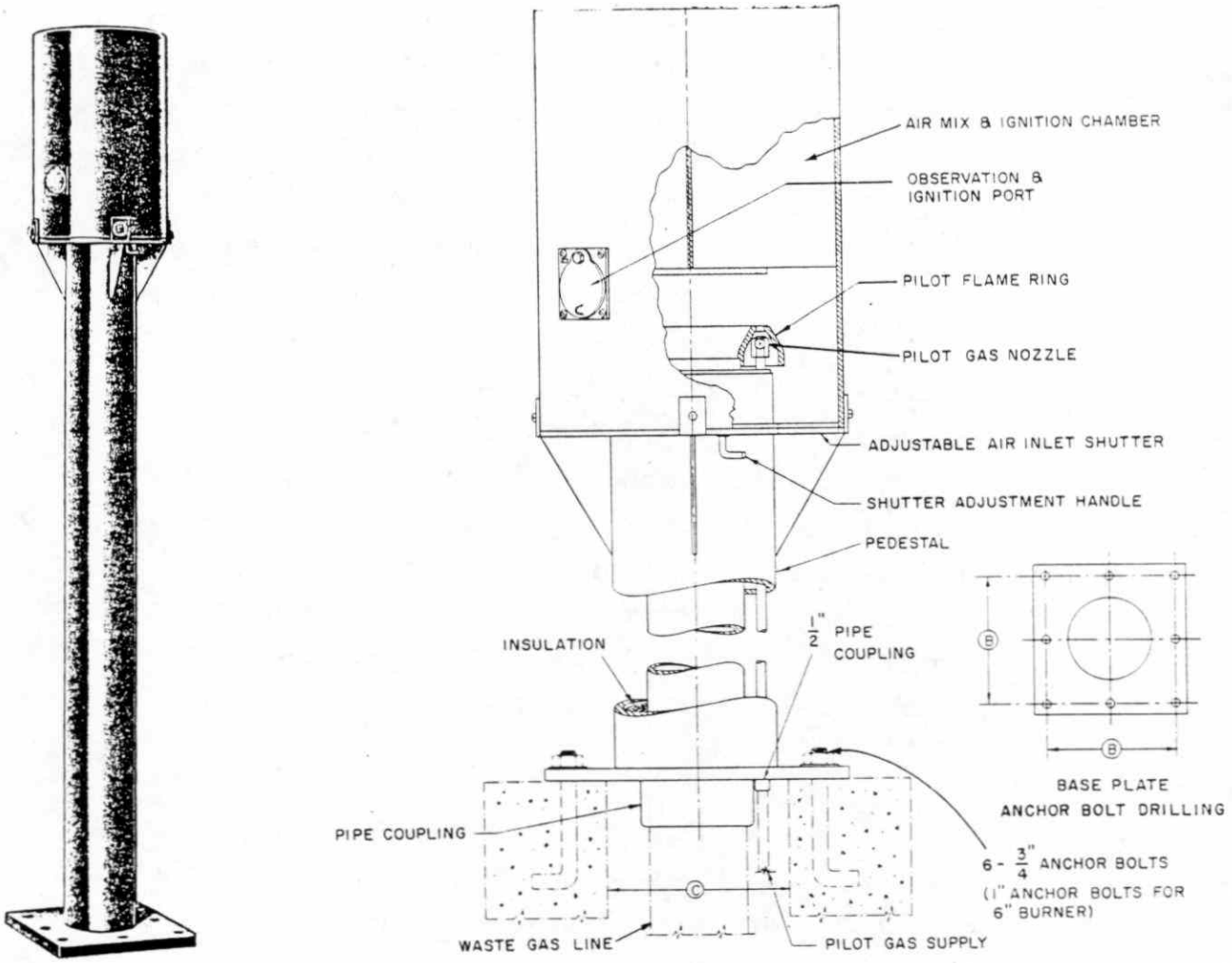

FIGURE 2-16 WASTE GAS BURNER

HIGH PRESSURE SYSTEMS

A high pressure gas system is used where the low pressure methane is to be compressed and stored for future use and/or required at a higher pressure than that available from the digester, such as utilization in dual fuel engines which drive electrical generators whose requirements are generally in the order of 30 p.s.i. or larger. The system is fed from the low pressure gas train, compressed, and stored in a large gas receiver. This arrangement is generally restricted to the larger sewage plants and is used to drive the high horsepower electric generators during peak power requirement hours to greatly reduce the electric bill.

As with all methane handling equipment, there are a variety of safety devices installed in the piping around the compressor. See Figure 2-17. Should the digester pressure drop to near zero inches W.C. for any reason, the Low Pressure Trip Out switch will trip out the compressor motor before the suction causes the digester vacuum relief valve to open and result in a potentially explosive situation or collapse the dome itself. An operator should, with a little experience, be able to set the compressor timer for maximum gas withdrawal rate while maintaining enough digester pressure to prevent activation of this switch. Installed close to the compressor suction is the strainer to prevent pipe scale or other harmful matter from being drawn into the unit. Between the strainer and compressor, there should be a Vacuum-Pressure gauge to indicate if the screen becomes plugged.

The compressor is usually of the rotary, lobe sliding vein, positive displacement type. The major components are a water cooled cylinder, water cooled heads, and a rotor with non metalic blades inserted in radial slots. The rotor which is smaller than the cylinder bore is supported eccentrically in the bore by the bearings. The crescent shaped pocket is divided into a number of cells by the rotor blades. As the rotor turns, each cell increases to a maximum and then decreases as it completes one revolution. Inlet gas

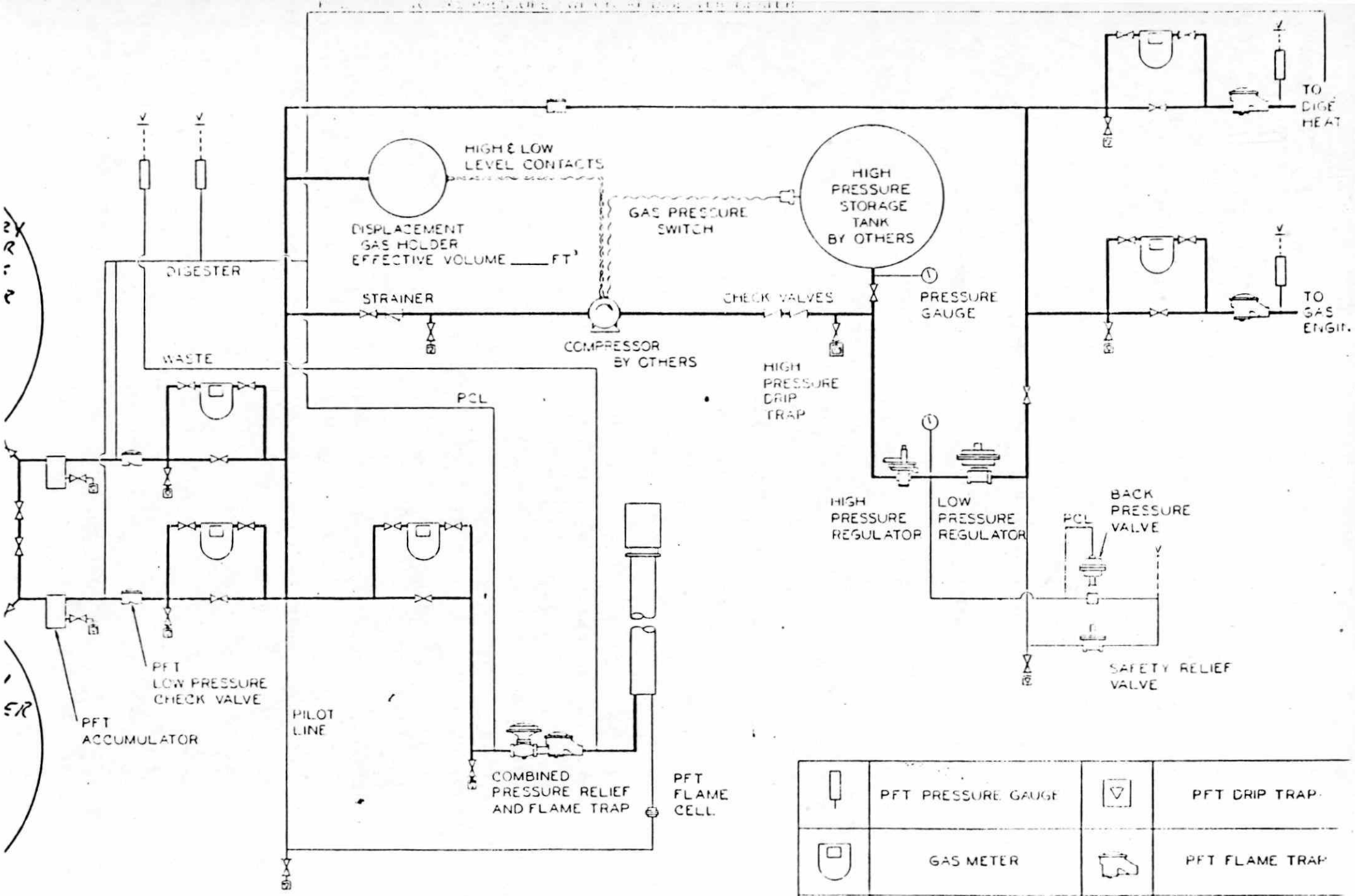

FIGURE 2-17

HIGH PRESSURE SYSTEM

is fed through ports to each cell as the cell increases in size. While the cell is decreasing, gas is being compressed uniformly until it is discharged at the close clearance area. Centrifugal force holds the blades against the cylinder wall as the compression chamber changes size thereby preventing trapped gas from slipping back through the machine.

A check valve should be mounted on the discharge side of the compressor to prevent loss in pressure when the compressor is shut down. The valve also prevents the unit from running backward when the motor is shut off.

The aftercooler cools the discharge gas from the compressor. It is a counterflow heat exchanger where cold water travels through a jacket on the outside of, and through lines installed inside of, the discharge line.

The oil separator removes oil and water droplets from the discharge gas. The separator removes 85-90% when installed with an aftercooler. A high pressure drip trap should be fitted to the separator for removal of collected oil and water.

Between the compressor and high pressure storage receiver is a pressure relief valve properly vented to atmosphere through a flame arrestor. This prevents damage to the compressor due to excessive discharge gas from a closed valve or a restriction in the line. Accompanying this is a high pressure trip out switch which should be set to cut out the compressor motor before the pressure reaches the level required to open the pressure relief valve.

From this point the compressed gas is transferred by steel piping to the storage receiver and high pressure equipment. The receiver generally consists of an above ground steel sphere ranging in design pressure from 30 to 275 P.S.I. and 30-120 feet in diameter.

Pressure relief valves should be mounted on top of the sphere to prevent rupture in the event of thermal expansion. High pressure drip traps should be installed on the low points of the gas transmission system in order to remove any accumulated condensation.

Monitoring devices around the compressor will include:

1. a thermometer to measure the compressor temperature; the cooling water to the compressor should be set to maintain a temperature of 100°F (38°C)

2. a thermometer to measure the discharge gas temperature, which should not exceed 400°F (225°C)

3. a thermometer to measure discharge gas temperature downstream from the aftercooler; the cooling water should be set for about 100°F (38°C)

4. a pressure gauge to monitor the pressure in the gas receiver.

MAINTENANCE

Attached at Appendix B is a maintenance guide for digester gas system components. This is not a substitute for the manuals and instructions provided by a manufacturer.

CALCULATION
WEIGHT REQUIREMENTS
PRESSURE/VACUUM RELIEF VALVES

1. FORMULA

Weights Required in lbs. = $\pi R^2 P$

Where π = 3.1416

R = Radium of valve diameter

P = Pressure in PSIG

2. EXAMPLES

a) Valve Diameter = 5", Radius - "R" = 2.5"

Say Gas Pressure is 14", W.C. or 0.5 PSIG

Lead Weight Required = $\pi R^2 P$ = 3.1416 x 2.5 x 2.5 x 0.5 = 9.8 lbs

b) Valve Diameter = 3", Radius "R" = 1.5"

Gas Pressure is 14", W.C. or 0.5 PSIG

Lead Weight Required = $\pi R^2 P$ = 3.1416 x 1.5 x 1.5 x 0.5 = 3.53 lbs

APPENDIX B

DIGESTER GAS DISTRIBUTION SYSTEM MAINTENANCE GUIDE

DIGESTER GAS DISTRIBUTION SYSTEM

MAINTENANCE GUIDE

	ITEM	FUNCTION	MAINTENANCE	
			FREQUENCY	FUNCTIONS
1.	Pressure Relief Valves	Vents excess gas to atmosphere	3 monthly yearly	Inspect for proper operation. Dismantle check valve for free operation and corrosion. Clean, repair as necessary, adjust weights (if necessary) and reassemble
2.	Vacuum Relief Valve	Relieves negative pressure to prevent collapse of tank or allowing entry of air to digester	3 monthly yearly	As for Pressure Relief Valve As for Pressure Relief Valve
3.	Flame Arrestors	Protects against flash-back	3 monthly	Shut off the flow of gas. Valve gas off. Pull one end plate and slide baffle cartridge and replace with spare unit. Clean any build up of scale from plates. DO NOT DISMANTLE CORE. Test for leaks after reassembling.
4.	Thermal Valves	Shuts off gas if flame develops and heat sufficient to melt fusible plug	Based on experience. yearly	Remove wing nut. Visually inspect stem position through glass tube. If stem not visible, remove valve. Replace metal slug. Reassemble. Dismantle. Inspect and clean by removing any residue and scale. Reassemble

DIGESTER GAS DISTRIBUTION SYSTEM

MAINTENANCE GUIDE

	ITEM	FUNCTION	MAINTENANCE FREQUENCY	MAINTENANCE FUNCTIONS
5.	Sediment Traps	Removes scale and moisture from gas to protect relatively complex equipment.	As experience dictates.	Remove cover plate. Check level using inspection pipe. Clean; using blowout connection
6.	Drip Traps	Installed at all low points to collect and safely remove condensed water in gas system.	Twice daily 6 monthly	Drain. May require draining more often in cold weather Dismantle. Inspect. Clean as necessary.
7.	Manometers	To monitor/check gas pressure in lines leading from digester and to utilities and waste burner	weekly monthly	Check fluid level. Add if necessary. Remove glass and clean.
8.	Pressure Regulator	To control release of gas at a predetermined pressure.	Annually	Lift cover over linkage; inspect parts for ease of operation by manually moving the weight arm. Check diaphragm for deterioration
9.	Pressure Relief and Flame Trap assembly	To maintain a set back pressure so that only surplus gas is wasted and to stop flame and explosion waves	3 monthly Annually	See Flame Arrestor and Pressure Relief Valve

DIGESTER GAS DISTRIBUTION SYSTEM

MAINTENANCE GUIDE

ITEM	FUNCTION	MAINTENANCE FREQUENCY	MAINTENANCE FUNCTIONS
10. Flame Checks	To prevent flashback in small lines	As Experience Dictates	Remove, inspect and clean flame arresting element.
11. Back Pressure Check Valves	To prevent backflow of gas; Usually installed downstream of meters	Annually	Remove cover. Check valve for free movement and corrosion.
12. Explosion Relief	To protect major equipment by providing emergency excess pressure relief.	Every three months	Check for proper operation
		Annually	Dismantle, check for corrosion.
13. Waste Gas Burner (incl. Pilot)	To burn off excess gas	Annually	Inspect. Check ring type pilot daily. Replace electrodes (if installed) as necessary.
14. Manual gas cocks and valves	Various	As experience dictates.	Operate to check ease of operation.
		Annually	Dismantle, clean, lubricate.

DIGESTER GAS DISTRIBUTION SYSTEM

MAINTENANCE GUIDE

	ITEM	FUNCTION	MAINTENANCE FREQUENCY	MAINTENANCE FUNCTIONS
15.	Gas Booster and Compressors		Annually	Dismantle. Clean, lubricate and repack gland (if applicable).
16.	Heat Exchanger		Annually	Check for build up of deposit in water system.
			As required	Clean out sludge lines.
17.	Gas Piping (Above ground)	To transmit gas	Annually or As Experience Dictates	Check by removing inspection spools for corrosion, accummulation of deposits. Check joints for leaks using soap test. Repaint as necessary.
18.	Underground Piping	To transmit gas	Every three years	Pressure test.
19.	Vent Lines		Annually	Check to ensure no obstructions.
20.	Vent Fans	To prevent build up of hazardous concentration of gas	Annually	Inspect, lubricate.

SUBJECT:

DIGESTER GAS DISTRIBUTION

TOPIC: 3

DIGESTER GAS CHARACTERISTICS AND PIPING SYSTEMS

OBJECTIVES:

The trainee will be able to:-

1. Name the code(s) to which digester gas installations must conform.
2. Recall the important characteristics of Digester Gas including:
   a) Composition
   b) UEL and LEL
   c) Heating Value
3. Name the identification requirements for digester gas piping.
4. Recall the materials acceptable for digester gas piping.
5. Recall the materials acceptable for venting.
6. Recall the restrictions on the use of plastic pipe.
7. Recall:
   a) the purpose of inspection points and purge points,
   b) the proper location and size of inspection spools and purge points,
   c) the type(s) of valves used to isolate inspection spools,
   d) the agents used for purging and purging pressure.
8. Recall pressure testing requirements for:
   a) New underground piping.
   b) Piping inside buildings and connecting pipeways.
9. Recall the protection requirements for gas piping passing through walls and partitions.
10. Recall the installation requirements for gas piping installed underground.

DIGESTER GAS CHARACTERISTICS AND PIPING SYSTEMS

GENERAL

New digester gas installations must conform to the requirements of the Installation Code CAN I-B105-M81 Digester Gas Systems. Existing installations fail, in many cases, to meet these standards since, at the time of construction, standards were less stringent or not enforced. It is essential, therefore, that maintenance and repair be undertaken with the most recent codes as the basis of work so that installations are gradually upgraded and a safe working environment is provided for the operator.

DIGESTER GAS CHARACTERISTICS

Gas produced by anaerobic digestion has a high percentage of Methane, its main constituent. Its composition will vary from 60% to 75% Methane, 20% to 40% Carbon dioxide and varying percentages of oxygen, nitrogen and hydrogen sulphide. It has a heating value of 500-800 BTU per cubic foot; it is flammable, toxic and corrosive. Digester gas is explosive when mixed with air in a certain ratio. If the air to gas mixture is 5.7% to 13.5% by volume, it will explode if brought into contact with an open flame or spark. Below the Lower Explosive Limit (LEL) of 5.7%, nothing will occur while above the Upper Explosive Limit (UEL) 13.5%, the mixture burns but will not explode. Therefore, after every start-up of the digester, it must be made certain that the air to gas ratio (mixture) in the digester dome and piping system is below 5 per cent. Until this concentration is reached the gas should be vented to atmosphere. This includes the gas lines serving the plant boiler and the waste gas burner.

By the nature of its production digester gas is a very wet gas. For the purposes of the applicable Installation Codes, digester gas is considered dry if its dewpoint is $2^{o}C$ below the lowest temperature to which it will be exposed in any part of the system.

GAS PIPING IDENTIFICATION

It is essential that, in a facility, where various liquids, gases and/or slurries are being conveyed from one location to another, some means of identification is available. The most popular method is a combination of colour code and descriptive information. Special markings may also be required to warn of direction of flow, type of fluid within the pipe or other dangerous conditions.

Wastewater treatment plant digestion gas piping must be painted or colour coded with high visibility yellow orange paint. Each gas type system of piping must be labeled every 3 meters with the name of the gas being conducted and the direction of flow. Plastic piping systems must also be marked every three meters with the maximum rated operating temperature of the plastic material. All piping and fittings must carry a permanent manufacturer's identification as to material.

MATERIALS PIPING AND FITTINGS

The approved piping and fittings, depending on the application are:

1. Carbon (Black) Steel

2. Ductile Iron
3. Alloy
4. Stainless Steel
5. Plastic
6. Copper Pipe. For Vent or Bleed Lines Only. Type K not less than 3/8"ID with flared or compression type fittings.
7. Black Iron Pipe. For Vent or Bleed Lines 3/8"IPS Schedule 40.

All gasketing materials and seals shall be of neoprene or such other material resistant to the action of gas. Designers and owners are warned that some of the material may not have a life expectancy applicable to the design use. Thus caution must be exercised in the interest of safety when selecting and specifying material to be utilized.

Digester gas piping shall take the most direct route, contain as few elbows, drops and risers as is practicable, be of sufficient size to accomodate the maximum load requirements and when installed shall be at least equal to the applicable requirements of CAN 1 B149.1 INSTALLATION CODE FOR NATURAL GAS BURNING APPLIANCES AND EQUIPMENT corrected to the appropriate calorific value and relative density. For isolation and purging purposes, every run of digester gas pipe shall have a manual plug or ball type shut-off valve, approved for the application, installed at either end and at any junction. See Appendix A.

Components and accessories used in the system and made of cast iron or cast aluminum are acceptable. Cast iron pipe and fittings including flanges, but excluding ductile iron, shall not be used.

The following paragraphs state certain provisions applicable to specific materials.

Carbon Steel Pipes and Fittings

Carbon steel pipe conforming to the standard ANSI B 36.10 and fabricated to the specifications for welded and seamless pipe, or equivalent may be used if acceptable to the enforcing authorities.

Pipe thickness must conform to the requirements of CAN 1 B149.1 Code, Section 10. Carbon steel pipe must not be used for underground buried installations. Pipe joints may be threaded flanged or welded but, for pipe over 65 mm(2 1/2") screwed joints must not be used.

The following lines of fittings must be used with standard weight carbon steel pipe

1. Class 150 or Class 130 Malleable iron threaded fittings to ANSI B 16.3 Standard
2. Carbon steel welded fittings to ANSI B 16.9 Standard and ASTMA 234 Specification
3. Forged steel flanges, Class 150, or welded fittings to ASTM Specification B 88 and having an internal cross-sectional area of not less than 80 square millimetres.

It should be noted that, with wet gas, steel pipe under 100 mm (4") diameter size deteriorates rapidly. When digester gas has been properly dried steel pipe may be used more extensively and with better life expectancy.

Ductile Iron Piping and Fittings

Ductile iron piping and fittings must conform to certain standards: -

1. Ductile iron pipe, centrifugally cast in metal molds or sand lined molds to CSA B131.14
2. Flanged ductile iron pipe to CSA B131.17 Flanged Cast Iron and Ductile Iron Pipe with Threaded Flanges.
3. Ductile iron fittings, 4 inches through 24 inches to CSA B131.15 Gray Iron and Ductile Iron Fittings 3 inches through 24 inches.

When ductile iron is used: -

1. Above ground pipe joints shall be flanged Class 125 to ANSI B16.1 and ASTM A-47 Standards. Threaded flanges are acceptable.
2. Underground (buried) pipe joints shall be made with ductile iron mechanical compression type joints with neoprene gaskets to CSA B131.10 (ANSI A 21.11) where acceptable to the enforcing authorities.

Plastic Piping and Fittings

Plastic piping and fittings where used must be certified by the CSA, CGA or ULC to CSA standard 137.4 as a polyethylene plastic piping system. Joining of plastic pipe must conform to CSA standard 2184 Gas Pipeline Systems. This is to ensure that it is acceptable for gas supply piping and that the method of joining is by thermal fusion or by an equally acceptable means using the proper tools and qualified personnel. Mechanical compression type flexible or non flexible joining methods and fillings are acceptable only for underground application with the acceptance of the enforcing authority.

To prevent pipe failure or fatigue, plastic pipe -

1. Must NOT be installed to convey compressor gas just downstream from the gas compressor. Excess gas temperature may result in pipe failure through pipe fatigue.
2. Must NOT be subjected to internal or external temperatures in excess of its certified range and in no case more than 100°F. (38°C)
3. Must be effectively shielded in outdoor locations from the sun's rays if it is subject to adverse affects by the rays.

Plastic pipe must be installed and supported to maintain a uniform designed slope and when installed shall provide for expansion and contraction as specified by the manufacturer.

Alloy Piping and Fittings.

Alloy piping may be used only where acceptable to the enforcing authority. When used it shall have a thickness not less than standard weight and will conform to the specification ASTM A 714 High Strength Low Alloy Welded and Stainless Steel Pipe.

Fittings used with alloy steel pipe shall be Class 150 (standard weight) malleable iron threaded fittings conforming to ANSI B 16.3 Code.

Stainless Steel Piping and Fittings.

Type 316 Stainless Steel Pipe and Fittings may be used for above ground and underground installations only where acceptable to the enforcing authority. Appendix B describes the detailed requirements for above ground installation. For underground installations stainless steel pipe in sizes 12.7 to 304.8 mm (½" to 12½) must be of schedule 405 in accordance with ANSI B 36.19. The fillings must also be Schedule 405 butt-welded type in accordance with MSS SP 43 and ANSI B 16.9.

INSPECTION POINTS

To permit periodic internal inspection of the piping system, at least one inspection spool of the same material as the pipe, not less than 300 mm (12") in length, shall be provided at an appropriate, readily accessible, low point in a horizontal run of the system carrying wet gas. A similar spool shall be provided in a run carrying dry gas. Other inspection points may be provided with tee's (blank flange) or elbows. Manual plug or ball type valves are to allow isolation and removal of the spool and to permit internal inspection of the pipe upstream and downstream of the spool. Large plants with extensive piping systems and extensions to existing systems will require additional inspection spools in recognizable problem areas.

PURGING

To permit purging the whole or part of the system, purge points shall be provided in the piping at each branch system manual shut-off valve, at both sides of the valve, if applicable, and at other necessary points in the system. The purge points shall be not less than 1/2" nominal pipe size, fitted with a manual plug or ball type shut-off valve, which shall be plugged or capped.

Purge points shall be located so as to avoid deposition of sediment.

Digester gas piping before being put into service shall be purged of air and before being removed for inspection

repair or replacement shall be purged of digester gas. Purging shall be done using only carbon dioxide or nitrogen gas to not more than the maximum positive pressure setting of the waste gas burner excess pressure relief valve but shall not be in excess of 3 psig, whichever is lesser. Underground digester gas piping may be purged hydrostatically instead of using carbon dioxide or nitrogen. All other purging procedures shall be carried out as outlined in CAN 1 B149.1 INSTALLATION CODE FOR NATURAL GAS BURNING APPLIANCES AND EQUIPMENT. (The American Gas Association Publication AGA PURGING PRACTICES AND PROCEDURES is also recommended as good practice).

PRESSURE TESTING PIPING

New underground piping shall be hydrostatically tested before back-filling to 100 psig for a duration of one hour with zero leakage. All new piping in the gas system located inside buildings and connecting pipeways shall be pressure tested with air or inert gas to 1-1/2 times rated working positive pressure or 3 psig, whichever is the greater for a minimum of 1 hour and a soap solution used for leak detection.

GAS PIPING PASSING THROUGH WALLS AND PARTITIONS

When gas piping passes through walls or partitions, it shall be protected from direct contact with the wall or partition construction material, and the wrapper or coating shall not restrain longitudinal movement of the pipe.

1. Inside Walls and Partitions.

   Where a metal sleeve is used to protect gas piping passing through an inside wall or partition the metal used shall be of a material resistant to corrosive action from the construction material used in the wall or partition, or the outside surface of the metal sleeve shall be coated or wrapped with a corrosion resistant material.

2. Outside Walls. Where a metal sleeve is used to protect gas piping through an outside wall the metal used shall be of a material resistant to corrosive action from the construction material used in the wall, or the outside surface of the sleeve shall be coated or wrapped with a corrosion resistant material and the remaining space between the outside surface of the sleeve shall be caulked with a corrosion resistant caulking material to provide a water seal.

UNDERGROUND PIPING

Underground piping (other than plastic) shall be wrapped or coated with an asphaltic compound or equivalent corrosion protection. It will be installed -

1. below frost level
2. with a minimum of 150 mm of tamped sand all around before backfilling
3. without threaded fittings.

When piping is laid or intended to be under hardtop, pavement, or roadway for its entire length or when the hardtop or pavement extends for 7.5 m or more of its length the pipe shall be placed in a casing of not less than 50 mm larger internal diameter. The casing material shall have a smooth interior to prevent damage to the gas pipe and shall be acceptable to the enforcing authorities.

The casing shall be sealed at each end and a vent pipe of not less than 2 inch nominal pipe size shall be installed at each end extending above the ground and shall be constructed so as to prevent water from entering the casing. The termination of each vent shall be not less than 600 mm above grade level, shall be provided with an 180° bend with bug screen, or equivalent and shall be protected against physical damage.

Short lengths of underground piping shall have a 2% slope with the low end located in the building at which there shall be installed a manual drip trap. Long lengths of underground piping, where it is not practical to have one

continuous slope,may be installed with the required slope in two or more directions from a common high point, if a manual drip trap is located inside the building(s) at each low point.

APPENDIX A

EXTRACTS

CODE CAN 1 B149.1-1976

NATURAL GAS PIPING

10. PIPING AND TUBING SYSTEMS, HOSE AND FITTINGS

10.1 General

10.1.2 Piping, tubing and fittings shall be new, or used provided they have not been used for any other purpose than for conveying propane or gas, and shall meet the requirements of Clause 10.1.3.

10.1.3 Piping, tubing and fittings if removed from any gas installation, shall not be used again until they have been thoroughly cleaned, inspected and ascertained to be equivalent to new material.

10.2 Material

10.2.1 Steel piping shall be black and shall comply with CSA Standard B63, Welded and Seamless Steel Pipe.

10.2.2 Fittings used with steel pipe shall be of malleable iron or steel and shall comply with ANSI Standard B 16.3 for Malleable Iron Fittings.

10.3.2 Piping and Tubing Systems Operating at Pressures 1/2 psig or Less.

10.3.2.1 Piping and tubing systems operating at pressures 1/2 psig or less shall be designed so that the loss in pressure between last stage regulators and appliances shall not exceed 0.5 in w.c. The minimum size of pipe, tubing and fittings shall be in accordance with Appendix C.

10.3.3 Piping and Tubing Systems Operating at Pressures in Excess of 1/2 psig

10.3.3.1 Piping and tubing systems operating at pressures in excess of 1/2 psig:- the pressure loss in piping and tubing systems operating at pressures in excess of 1/2 psig from the last stage regulators to utilization equipment under maximum flow shall not exceed 10% and shall be in accordance with Appendix B.

10.3.5 Resistance of Bends, Fittings and Valves

10.3.5.1 Appendix B gives the resistance of bends, fittings and valves as equivalent length of straight pipe in ft to be added to the actual length to obtain the total equivalent length on which pressure loss calculations shall be based.

10.3.6 Piping less than 1/2 in diameter shall not be used indoors except that 3/8 in piping may be used as a branch line not exceeding 25 ft in length and not supplying more than 15,000 Btuh.

10.3.7 Piping less than 1/2 in diameter shall not be used in any concealed location.

10.3.8 Steel piping of less than 1/2 in diameter shall not be used underground.

10.3.9 The minimum size of piping from the point of distributor supply to the drop or riser of any central heating appliance, unit heater or similar heating appliance of input of 76,000 Btuh or more shall be 1 in diameter and the drop or riser shall be not less than 3/4 in diameter

TABLE 10.6.1

Gas Supply Pressure

Type of Building	Maximum pressure, psig	
	Other than Central Machine Room	Central Machine Room
One & two family dwellings	½	–
Hotels & Motels	5	20
Dwellings for more than two families and apartments	5	20
Institutional Public Assembly and Schools	5	20
Commercial	20	20*
Industrial	60	60
Central Heating Plants		60

*60 psig is permissible in machine rooms located on the roof of commercial buildings

10.8 Location

10.8.2 Piping or tubing shall not be installed:

a) in stairwells of other than one or two family dwellings;

b) in chimneys, flues, elevator shafts, dumbwaiters, coal chutes, clothes chutes and garbage chutes;

c) in heating or ventilating plenums, ducts and shafts; or

d) in contact with cinders or ashes.

10.8.6 Vertical piping chases shall have an escape opening at the top of each chase and the opening shall have a munimum area equivalent to a round opening of 1 in diameter.

10.9 Piping Practices

10.9.1 Piping and fittings shall be clear and free from cutting or threading burrs, scale, and defects.

10.9.2 The ends of all piping shall be reamed.

10.9.3 Piping or tubing shall not be supported by any other piping or tubing but shall be installed with individual supports of sufficient strength and quality. Piping supports shall be spaced in accordance with Table 10.9.3

TABLE 10.9.3

Spacing of Supports for Piping

IPS	Maximum Spacing of Supports — ft
½ or less — horizontal	6
¾-1 — horizontal	8
1¼-2½ — horizontal	10
3-4 — horizontal	15
5-8 — horizontal	20
10 or larger — horizontal	25
1¼ or larger — vertical	Every floor but not less than 125% of horizontal spacings

10.10 Joints and Connections

10.10.2 Piping 2 1/2 in diameter and over, shall have welded joints except threaded joints may be used if in the opinion of the enforcing authority, welded joints are not practicable.

TABLE 10.10.3

Approximate Length of Pipe Threads

IPS	Approximate Length of Threaded Portion (Inches)
½	¾
¾	¾
1	7/8
1¼	1
1½	1
2	1
2½	1½
3	1½
4	1⅝

10.10.5 Gasket materials shall be of neoprene or other inert material resistant to the action of gas. Natural rubber shall not be used.

10.11 Branch Outlet Piping

10.11.2 Branch outlet piping shall be taken from the top or sides of horizontal piping unless the branch piping is a drop and is provided with a dirt pocket.

10.12 Piping Outlets

10.12.1 Outlets from piping systems shall be securely closed and made tight, during periods when appliances are not connected, by means of:

a) nipples and caps or threaded metal plugs when the pressure is not in excess of 1/2 psig, or

b) shut-off valves which shall be securely closed and made gas tight with nipples and caps or threaded metal plugs, when the pressure is 1/2 psig or over.

10.12.2 Unthreaded portions of piping outlets shall extend at least 1 in through finished ceilings and walls, and at least 2 in through floors.

10.13 Drip and Dirt Pockets

10.13.1 A dirt pocket shall be provided at the bottom of any piping drops serving appliances.

10.13.2 A drip or dirt pocket shall be of such size that:

a) the depth of the drip or dirt pocket is not less than the internal diameter of the piping it serves whichever is the greater; and

b) its diameter is not less than the diameter of the piping it serves.

10.13.4 Every drip or dirt pocket shall be capped.

10.14 Prohibited Practices

10.14.2 Bushing shall not be used.

10.15 Underground Piping and Tubing

10.15.1 Piping having a nominal diameter of less than 1/2 in shall not be used underground.

10.15.2 Underground piping and tubing shall not be installed with threaded fittings, or flare connections.

10.15.6 Underground piping and tubing shall not pass below foundations, walls, or under buildings.

10.17 Identification of Piping

10.17.1 Piping in every institutional, commercial and industrial building shall be painted or banded with at least 1 coat of high visibility yellow-orange paint or tape.

10.18 Manual Shut-Off Valves

10.18.2 A readily accessible manual shut-off valve shall be installed as close as possible to the valve train of each appliance. Where there is a drop or riser to the appliance this valve shall be in the drop or riser.

10.22 Testing of Piping. Tubing, Hose and Fittings

10.22.1 When any part of the system is to be enclosed or concealed, the test specified in Clause 10.22.4 shall precede the work of closing in.

10.22.2 Before turning on the gas a check shall be made to ensure that all openings from which gas may escape are closed.

10.22.3 Immediately after turning the gas into the piping or tubing a test shall be made to determine that no gas is escaping by carefully watching the test dial of the meter or where a meter is not provided, by listening for gas flow through the regulator.

10.22.4 Pressure Testing. All piping and tubing shall be pressure tested using either gas, air or an inert gas (carbon dioxide, nitrogen or a mixture of these) in accordance with the following:

a) Before appliances are connected, piping or tubing shall be tested in accordance with:;

TABLE 10.22.4(a)

Test Pressure Table

Working Pressure (PSIG)	Diameter of pipe or tubing (inches)	Length of pipe or tubing (ft)	Test Pressure (PSIG)	Test Duration (Hrs)
Less than ½	Less than 1½	100 or less	25	½
Less than ½	All sizes	More than 100	25	1½
½ to 33	All sizes	All lengths	50	24
Over 33	All sizes	All lengths	1½ times the max. operating pressure	24
All piping in false ceilings and concealed spaces			The greater of 150 psig or 1½ times the max. operating pressure	24

b) after appliances are connected, the piping or tubing shall retain a test pressure of not less than 10 munutes without showing any drop in pressure. Pressure shall be measured with a pressure gauge or an equivalent device so calibrated as to be read in increments of not greater than 1 in w.c. The source of the test pressure shall be isolated before readings are commenced and if a leak is indicated by the test, the source of the leak shall be located by the use of an approved liquid leak detector solution or device.

10.22.5 Appliance connections and valve trains shall be checked while under normal operating pressure with an approved liquid leak detector solution or other approved device after the appliances are connected.

10.23 Purging of Piping and Tubing Systems and Hose After Leak Testing

10.23.1 Piping and tubing systems and hose containing air or inert gas shall be purged:

a) to the outdoors as in Clause 10.23.3 or

b) to an approved purge burner

c) and if the piping is 4 in IPS or larger and if air has been used for testing, the piping must be first purged with carbon dioxide or nitrogen or a mixture of these and the purged with gas in accordance with Clause 10.23.3

d) and the person doing the purging shall be in direct control of the gas during the purging operation by means of a valve having an attached operating handle.

e) and the piping for the purging gas shall be of a size or be reduced to a size not larger than 1/2 in IPS

10.23.3 Purging to Outdoors

10.23.3.1 When piping or tubing systems are to be purged to the outdoors:

a) the purging line shall not terminate closer than 10 ft to any building or air intake; and

b) the purging point shall be under constant supervision from a competent person who shall control the purge by a ¼ turn lever handle valve within 5 ft of the purge point. Such valve shall have an attached operating handle. No other valve shall be used to control or terminate the purge;

c) when purging is being done, smoking shall not be permitted, and maximum precautions shall be taken to remove or shut-off all sources and potential sources of ignition.

10.24 Purging Other Than Than Done After Leak Testing

10.24.1 When purging gas from piping or tubing systems for the purpose of repair, alteration, or abandonment, carbon dioxide, nitrogen or a mixture of these shall be used and the applicable procedures in Section 10.23 shall apply.

TABLE B-1

Maximum Capacity of Schedule 40 Pipe Including Fittings in Cubic Feet Per Hour Based on a Pressure Drop of 0.3 inch Water Column and Specific Gravity of 0.6

Length of Pipe Feet	Nominal Iron Pipe Size (IPS) Inches											
	½	¾	1	1¼	1½	2	2½	3	4	5	6	8
10	93	210	422	930	1,442	2,917	4,775	8,135	17,060	29,970	47,440	96,630
20	66	149	298	657	1,019	2,063	3,376	5,752	12,070	21,190	33,550	68,330
30	54	121	244	537	832	1,684	2,757	4,696	9,851	17,300	27,390	55,790
40	46	105	211	465	721	1,459	2,387	4,067	8,532	14,980	23,720	48,310
50	42	94	189	416	645	1,305	2,135	3,638	7,631	13,400	21,220	43,210
60	38	86	172	379	588	1,191	1,949	3,321	6,966	12,230	19,370	39,450
70	35	79	159	351	545	1,103	1,805	3,074	6,449	11,330	17,930	36,520
80	33	74	149	329	510	1,031	1,688	2,876	6,033	10,590	16,770	34,160
90	31	70	141	310	480	972	1,592	2,711	5,688	9,989	15,810	32,210
100		67	133	294	456	923	1,510	2,572	5,396	9,476	15,000	30,560
125		59	119	263	408	825	1,350	2,301	4,826	8,476	13,420	27,330
150		54	109	240	372	753	1,233	2,100	4,406	7,736	12,250	24,940
175		50	101	222	345	697	1,141	1,944	4,079	7,163	11,340	23,100
200		47	94	208	322	652	1,068	1,819	3,815	6,702	10,610	21,610
250		42	84	186	288	583	955	1,627	3,413	5,994	9,489	19,330
300		38	77	170	263	533	872	1,485	3,115	5,471	8,662	17,640
350		36	71	157	244	493	807	1,375	2,884	5,065	8,018	16,330
400		33	67	147	228	461	755	1,286	2,698	4,738	7,501	15,280
450		31	63	139	215	435	712	1,213	2,544	4,468	7,073	14,410
500			60	131	204	413	675	1,150	2,413	4,238	6,709	13,660
550			57	125	194	393	644	1,097	2,301	4,041	6,397	13,030
600			54	120	186	377	616	1,050	2,203	3,870	6,126	12,480

TABLE B-2

Maximum Capacity of Schedule 40 Pipe Including Fittings in Cubic Feet Per Hour Based on a Pressure Drop of 0.5 inch Water Column and Specific Gravity of 0.6

Length of Pipe Feet	Nominal Iron Pipe Size (IPS) Inches											
	½	¾	1	1¼	1½	2	2½	3	4	5	6	8
10	120	271	545	1,201	1,862	3,766	6,165	10,500	22,020	38,690	61,240	124,700
20	85	192	385	848	1,316	2,663	4,358	7,426	15,580	27,360	43,310	88,210
30	70	156	315	693	1,074	2,174	3,559	6,063	12,720	22,330	35,360	72,020
40	59	136	272	600	931	1,884	3,082	5,250	11,010	19,340	30,620	62,370
50	54	121	244	537	833	1,685	2,756	4,697	9,852	17,300	27,390	55,780
60	49	111	222	489	759	1,538	2,516	4,287	8,993	15,790	25,000	50,930
70	45	102	205	453	704	1,424	2,330	3,969	8,326	14,630	23,150	47,150
80	43	96	192	425	658	1,331	2,179	3,713	7,789	13,670	21,650	44,100
90	40	90	182	400	620	1,255	2,055	3,500	7,343	12,900	20,410	41,580
100	37	86	172	380	589	1,192	1,949	3,320	6,966	12,230	19,360	39,450
125	34	76	154	340	527	1,065	1,743	2,971	6,230	10,940	17,330	35,290
150	31	70	141	310	480	972	1,592	2,711	5,688	9,987	15,810	32,200
175		65	130	287	445	900	1,473	2,510	5,266	9,247	14,640	29,820
200		61	121	269	416	842	1,379	2,348	4,925	8,652	13,700	27,900
250		54	108	240	372	753	1,233	2,100	4,406	7,738	12,250	24,950
300		49	99	219	340	688	1,126	1,917	4,021	7,063	11,180	22,770
350		46	92	203	315	636	1,042	1,775	3,723	6,539	10,350	21,080
400		43	86	190	294	595	975	1,660	3,483	6,117	9,684	19,730
450		40	81	179	278	562	919	1,566	3,284	5,768	9,131	18,600
500		37	77	169	263	533	871	1,485	3,115	5,471	8,661	17,630
550		36	74	161	250	507	831	1,416	2,971	5,217	8,258	16,820
600		35	70	155	240	487	795	1,356	2,844	4,996	7,909	16,110

SUBJECT:

NATURAL GAS, PROPANE AND FUEL OIL

TOPIC: 4

FUEL CHARACTERISTICS AND INSTALLATION CODES

OBJECTIVES:

The trainee will be able to:-

1. Recall the important characteristics of Natural Gas, Propane and Fuel Oil including:-
   a) Composition
   b) Heating Value
   c) LEL and UEL
   d) For fuel oil, flashpoint and ignition point and grade
2. Recall and make use of the Installation Codes for Natural Gas, Propane and Fuel Oil as they apply in a Digester Gas Distribution System.

FUEL CHARACTERISTICS AND INSTALLATION CODES

GENERAL

In a wastewater treatment plant incorporating sludge digestion there are four fuels which one should be familiar with.

1. Fuel oil, used for boilers
2. Natural gas, also used in some cases as a fuel for boilers.
3. Propane gas used for the ignition pilots of boilers and waste gas burners
4. Digester gas used as a fuel for boilers to reduce energy costs (see topic 3)

The use of any fuel is governed by a code for the installation of burning appliances and equipment. Extracts of the following are attached:-

1. CAN 1 B149.1-1976 Installation Code for Natural Gas Burning Appliances and Equipment Appendix A
2. CAN 1 B149.2-1976 Installation Code for Propane Burning Appliances and Equipment Appendix B
3. CSA Standard B139-1971 Installation code for Oil Burning Equipment Appendix C

FUEL CHARACTERISTICS

The principal characteristics of a fuel which are of importance are:

1. Composition
2. Heating value expressed in British Thermal Units (BTUs)
3. Lower Explosive Limit (LEL) and Upper Explosion Limit (UEL) for gases
4. For fuel oils the grade, flashpoint and ignition point

A summary comparing the characteristics of Digester Gas, Natural Gas, Propane and Fuel Oil is attached as Appendix D.

Natural Gas

Natural gas is a fossil fuel which is found below the earth's surface. In its original state it has hydrogen sulphide in it. At the well head this is removed by scrubbing because of its corrosiveness and a foul smelling compound, Mercaptan, is added to ensure that the natural gas can be detected by smell below the LEL. It is then piped under pressure to the user.

The composition of natural gas varies, but its principal component is Methane (94-95%). It has a heating value of approximately 1000 BTU per cubic foot.

Natural gas is non toxic, non corrosive gas. It is clean burning but explosive when mixed with air. The LEL is 4.9% and the UEL 15%. Natural gas which is lighter than air tends to dissipate and become diluted when released from a confined space.

Propane Gas

It is a costly fuel which requires special pipes and storage tanks. It is only used in treatment plants as a fuel for ignition pilots. Propane is a by-product of natural gas and crude oil.

Sold as a liquid in cylinders it has a heat value of about 2500 BTU per cubic foot. The LEL is 2.1% and the UEL is 10.1%. Being heavier than air it sinks to ground level if released, filling up low lying areas. It does not dissipate easily.

Fuel Oil

Fuel oils are the products or by products of the distillation of crude oil. The higher the grade of oil the heavier it is. Thus #1 grade fuel oil is the type of oil used in vaporizing or wick type burners. Number 6 is a very heavy type which requires pre-heating before it can be pumped to the burner. In a wastewater treatment plant #2 fuel oil with a flashpoint of about 40°C is most commonly used.

Fuel oil is composed of compounds of carbon and hydrogen with small amounts of oxygen sulphur and nitrogen. No. 2 fuel oil has a heating value of 18,000 - 19,000 BTU/lb at 60°F (15°C).

STORAGE OF FUELS

Since natural gas is metered to the user and digester gas is wasted through a burner if not used, only the onsite storage of fuel oil and propane need be considered. As mentioned earlier, the storage conditions are established in the Applicable Installation Codes.

Fuel Oil

Section 6 of CSA Standard B 139-1971 Installation Code for Oil Burning Equipment attached as Appendix C covers the minimum requirements for the installation of, alteration to and provision for maintenance of oil supply tanks. These should be carefully reviewed. The following subsections are of particular importance:

1. Subsection 6.2.4
2. Subsection 6.3 Tanks Installed Underground
3. Subsection 6.4 Supply Tanks Inside Buildings
4. Subsections 6.6 and 6.7 Supply Tanks Installed Above Ground Outside
5. Subsection 6.8 Filling of Supply Tanks
6. Subsection 6.9 Venting of Supply Tanks, including Table 3
7. Subsection 6.10 Gauging of Supply Tanks

Propane Gas

Section 12 of CAN 1 B149.2-1976 Installation Code for Propane Burning Appliances and Equipment covers the requirements for Cylinder Systems. Of particular importance are:

1. Section 12.5.3 Storage of Cylinders Awaiting Use - -General
2. Section 12.5.4 Storage of Cylinders for Use Outdoors

EXTRACTS

INSTALLATION CODE

CAN 1 B149.1-1976

NATURAL GAS

APPLIANCES AND EQUIPMENT

3. GENERAL REQUIREMENTS

3.3 Workmanship

3.3.1 All work shall be done in a workmanlike manner. Careful attention shall be paid not only to the mechanical execution of the work but also to the arrangement of the installation.

3.3.2 Personel performing installation, operation, and maintenance work shall be properly trained in such functions.

3.5 Checking for Gas Leaks

3.5.1 A match, candle, flame or other source of ignition shall not be used to check for a gas leak.

3.5.2. A light, other than a flashlight, used in connection with a search for gas leakage shall be of the Class 1 Group D type.

3.6 Smoking

3.6.1 Smoking or providing any source of ignition shall not be permitted in the area where work is being done on piping, tubing or equipment which contains or has contained gas, unless the piping, tubing or equipment has been purged of all gas as outlined in Section 10.24.

4. INSTALLATION REQUIREMENTS FOR APPLIANCES AND EQUIPMENT

4.2 Location

4.2.1 Except for a direct vent appliance, an appliance requiring venting shall be located as close as practicable to a chimney or vent.

4.3 Appliance Connections

4.3.1 A vent appliance such as a furnace, boiler, room heater, water heater or incinerator shall be connected directly to the gas supply with piping or tubing.

4.4 Appliance Clearances

TABLE 4.4.2
Clearance* With Specified Forms of Protection†

Type of Protection‡	Where the Required Clearance With No Protection Is: 36 inches			18 inches			12 inches		9 inches	6 inches	
	Above	Sides and Rear	Flue Pipe	Above	Sides and Rear	Flue Pipe	Above	Sides and Rear	Flue Pipe	Above	Sides and Rear
a) ¼ inch asbestos millboard spaced out 1 inch	30	18	30	15	9	12	9	6	6	3	2
b) No. 28 MSG sheet metal on ¼ inch asbestos millboard	24	18	24	12	9	12	9	6	4	3	2
c) No. 28 MSG sheet metal spaced out 1 inch	18	12	18	9	6	9	6	4	4	2	2
d) No. 28 MSG sheet metal on 1/8 inch asbestos millboard spaced out 1 inch	18	12	18	9	6	9	6	4	4	2	2
e) 1¼ inch asbestos cement covering on heating appliance	18	12	36	9	6	18	6	4	9	2	1
f) ¼ inch asbestos millboard on 1 inch mineral wool batts reinforced with wire mesh or equivalent	18	12	18	6	6	6	4	4	4	2	2
g) No. 22 MSG sheet metal on 1 inch mineral wool batts reinforced with wire mesh or equivalent	18	12	12	4	3	3	2	2	2	2	2
h) ¼ inch asbestos cement board or ¼ inch asbestos millboard	36	36	36	18	18	18	12	12	9	4	4
i) ¼ inch cellular asbestos	36	36	36	18	18	18	12	12	9	3	3

* All clearances given in inches

† Except for the protection indicated in (e) above, all clearances shall be measured from the outer surface of the appliance to the combustible material disregarding any intervening protection applied to the combustible material, but in no case shall the clearance be such as to interfere with the requirements for combustion air and for accessibility.

‡ Applied to the combustible material unless otherwise specified and covering all surfaces within the distance specified as the required clearance with no protection. Thicknesses are minimum.

NOTE: Spacers shall be of noncombustible material.

Type of Protection‡	Where the Required Clearance With No Protection Is: 900 mm			450 mm			300 mm		225 mm	150 mm	
	Above	Sides and Rear	Flue Pipe	Above	Sides and Rear	Flue Pipe	Above	Sides and Rear	Flue Pipe	Above	Sides and Rear
a) 6 mm asbestos millboard spaced out 25 mm	750	450	750	375	225	300	225	150	150	75	50
b) 0.3 mm sheet metal on 6 mm asbestos millboard	600	450	600	300	225	300	225	150	100	75	50
c) 0.3 mm sheet metal spaced out 25 mm	450	300	450	225	150	225	150	100	100	50	50
d) 0.3 mm sheet metal on 3 mm asbestos millboard spaced out 25 mm	450	300	450	225	150	225	150	100	100	50	50
e) 30 mm asbestos cement covering on heating appliance	450	300	900	225	150	375	150	100	225	50	25
f) 6 mm asbestos millboard on 25 mm mineral wool batts reinforced with wire mesh or equivalent	450	300	450	150	150	150	100	100	100	50	50
g) 0.68 mm sheet metal on 25 mm mineral wool batts reinforced with wire mesh or equivalent	450	300	300	100	75	75	50	50	50	50	50
h) 6 mm asbestos cement board or 6 mm asbestos millboard	900	900	900	450	450	450	300	300	225	100	100
i) 6 mm cellular asbestos	900	900	900	450	450	450	300	300	225	75	75

4.6 Responsibilities of the Installer

4.6.1 Before leaving any installation, the installer shall ensure that all appliances installed by him are in safe working order.

4.10 Shut-Off Valves

4.10.1 A readily accessible shut-off valve shall be installed in the supply piping or tubing to each appliance.

5. REQUIREMENTS FOR THE INSTALLATION OF SPECIFIC TYPES OF APPLIANCES

5.1 Boilers

5.1.3 A boiler shall be installed with the following minimum clearances from combustible material: vertical, 18 inches (450 mm); sides and rear, 18 in (450 mm); front, 48 inches (1200mm); and, where service is required to be performed, not less than in Table 4.5.2.

5.16 Room Heaters and Decorative Appliances

5.16.1 A room heater in a bathroom shall be of the direct vent type.

5.25 Direct Vent Appliances

5.25.1 A vent terminal of a direct vent appliance shall be located not less than 3 ft (900 mm) from any building opening.

6. AIR FOR COMBUSTION, VENTING AND VENTILATION

6.1.1 An appliance shall be installed in a location where there is a sufficient air supply for combustion air, venting and ventilation air.

6.1.2 An appliance when installed shall not interfere with the proper circulation of the air supply. When a building is so tightly sealed that infiltration does not meet the air supply requirements, outside air supply shall be provided.

6.1.3 A duct used to convey air supply to or from the outdoors shall be of metal or other noncombustible material and shall be of the same cross-sectional area as in the free area of the opening to which they connect. The smaller dimension of a rectangular duct shall not be less than 3 inches (75 mm).

6.1.4 When an air supply is required from the outdoors, as in Clause 6.1.2 Subsection 6.2 or Clauses 9.1.2 and the air supply is for a natural draft or a fan assisted burner, the bottom of the air supply opening or the termination of the air supply duct shall be not more than 18 inches (450 mm) nor less than 6 inches (150 mm) above the floor level.

6.1.5 When the input of an appliance or when the combined input of a number of appliances installed in a single enclosure is

a) 400 000 Btuh (120 kW) or less, the air supply requirements shall be calculated in accordance with Subsection 6.2 or 6.3 except as provided in Subsection 6.6 or,

b) more than 400 000 Btuh (120 kW), the air supply requirements shall be calculated in accordance with Subsection 9.1.

6.1.6 Responsibility for the proper and adequate venting of all types of appliances shall rest with the installer.

6.1.7 No opening shall be located in a furnace return air system within the same room or space as a furnace unless combustion and ventilation air is provided to the room or space, and in no case shall such an opening be installed in or within 6 feet (2 m) of the return air plenum.

6.4 Dampers, Louvres and Grilles

6.4.1 The free area for an air supply opening area in Subsections 6.2 and 6.3 shall be calculated by substracting the blockage area of all fixed louvres, grilles or screens from the gross area of the opening.

6.4.2 Apertures in a fixed louvre, a grille or screen shall have no dimension smaller than 0.25 inch (6 mm).

6.4.3 A manually operated damper or manually adjustable louvres shall not be used.

6.4.4 An automatic combustion air damper.

a) shall not be installed in the air supply within a one or two-family dwelling, and

b) when installed in the air supply to a commercial, institutional or industrial building, shall be interlocked with the burner control system so that,

i) the damper is proven to be in the fully open position before ignition of the main burner, and

ii) the fuel supply to the appliance will be shut off in the event of damper failure.

6.8 Appliance Venting

6.8.1 Every appliance shall be connected to an effective chimney or vent except

a) a radiant heater installed in a masonry fireplace with an approved permanent opening that provides venting,

b) a domestic appliance which is approved for use without a vent,

c) an appliance installed in a building where adequate ventilation is provided by an exhaust fan, a natural draft ventilation, or by other means acceptable to the enforcing authority.

d) an appliance installed for the production of carbon dioxide in a greenhouse where the rate of combustion does not exceed 3 Btuh for each ft^3 (30 W per m^3) of greenhouse volume and the concentration of carbon dioxide in the atmosphere does not exceed 5000 parts per million (0.5 percent) and,

e) as provided in Subsection 6.22.

6.9 Methods of Venting Appliances

6.9.1 A vent or chimney shall be designed and constructed so as to develop a positive flow adequate to remove all flue gases to the outdoors.

6.9.3 A Type B vent shall only be used with an appliance that is certified with a draft hood except as provided for in Clauses 6.9.2, 6.9.4 and 6.22.2. A vent connector of Type B vent material shall not be used between the draft hood and flue outlet of a converted furnace or boiler.

6.9.4 A Type BW vent shall be used only with a recessed wall furance.

6.11 Chimneys

6.11.6 When a chimney serving an appliance burning a solid or a liquid fuel also serves a gas appliance through a separate opening, the vent connector for venting the gas appliance shall be above the vent connector from the other appliance.

6.11.7 A chimney shall be provided with a cleanout opening. A cleanout shall be of such construction that it will remain tightly closed when not in use. A tee fitting used as a cleanout or condensate drain shall have a tight fitting cap to prevent entrance of air into the chimney at that point.

6.13 Vent and Chimney Termination

6.13.1 A vent or chimney shall extend high enough above the building or neighbouring obstruction so that wind from any direction will not create a positive pressure in the vicinity of the vent or chimney termination.

6.13.2 A Type B, BW or L Vent, a Factory Built Type A Chimney, or a Medium Heat Appliance Factory Built Chimney shall,

a) terminate above a flat roof of a building in accordance with Table 6.13.2 (a) and at least 6 inches (150 mm) higher than any portion of the building within 10 feet (3 m) measured horizontally from the top of the vent or chimney, and

b) terminate above a sloping roof in accordance with the vent or chimney manufacturer's certified installation instructions but in no case nearer the roof than the distances shown in Figure 6.13.2 (b).

Table 6.13.2(*a*)

Termination Height for Vents and Factory Built Chimneys Above Flat Roof

Nominal Inside Diameter, In.	(mm)	Minimum Termination Height, In.	(mm)
4 or less	(100)	24	(600)
5	(125)	30	(750)
6	(150)	36	(900)
7	(175)	48	(1200)
8 and larger	(200)	60	(1500)

Figure 6.13.2(*b*)

Termination Height for Vents and Factory Built Chimneys Above Pitch Roof

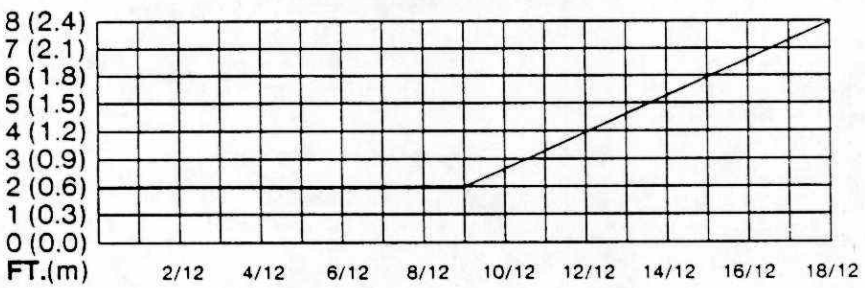

6.13.5 A vent or chimney shall terminate not less than 5 ft. (1.5 m) in height above the highest connected appliance draft hood outlet or flue collar except as provided in Clause 6.22.1.

6.13.7 A vent shall not terminate

a) In a location where flue gases may enter a combustion air inlet of an adjacent appliance or a building air inlet, and shall be at least 6 ft (1.8 m) from any such inlet or,

b) less than 3 ft (900 mm) from any other building opening.

6.17 Vent Connectors

6.17.8 Except as provided in Clause 6.17.10, a vent connector of Type B material shall be installed with a minimum clearance to combustible material, including passage through a combustible wall or partition, in accordance with Table 6.17.8.

TABLE 6.17.8
Appliance Vent Connector Clearance

Appliance	Minimum Distance from Combustible Material — Inches (mm)	
	Type B Vent Connector	Other Than Type B Vent Connector
Boiler	1* (25)	6 (150)
Warm Air Furnace	1* (25)	6 (150)
Service Water Heater	1* (25)	6 (150)
Space Heater	1* (25)	6 (150)
Floor Furnace	3† (75)	9 (225)
Incinerator	Not Permitted	18 (450)
Conversion Burner (with draft hood)	6 (150)	9 (225)

* *Except as otherwise certified.*

† *3 inches (75 mm) for a distance of not less than 3 ft (900 mm) from the outlet of the draft hood. Beyond 3 ft (900 mm), the minimum clearance is 1 inch (25 mm).*

6.18 Chimney Connections

6.18.2 The vent connector shall not protrude into the chimney and obstruct the chimney flue.

6.18.3 A sleeve shall be used to facilitate removal of the vent connector for cleaning.

6.21 Draft Hoods

6.21.2 A draft hood shall not be used on an appliance with a positive over-fire draft or on an appliance with an induced draft.

6.27 Induced or Forced Draft Devices

6.27.1 When an induced or forced draft device is used, provision shall be made to prevent the flow of gas to the burner on failure of the device.

9. SPECIAL INSTALLATION REQUIREMENTS FOR APPLIANCES HAVING AN INPUT IN EXCESS OF 400,000 Btuh (120 kW)

9.1 Air Supply to Space Occupied by Appliances and Equipment

9.1.1 Ventilation of the space occupied by an appliance and equipment shall be provided by an opening or openings for ventilation air at the highest practical point communicating with outdoors. The total cross-sectional area of such openings shall be at least 10 percent of the area required in Clauses 9.1.2 and 9.1.3, but in no case shall the cross-sectional area be less than 10 inch^2 (6500 mm^2).

9.1.2 When air supply is provided by natural air flow from outdoors for natural draft, partial fan-assisted, fan assisted or power draft assisted burners, there shall be a permanent air supply opening having a cross-sectional area not less than 100 inch^2 (65 000 mm^2) plus 1 square inch for each 14 000 Btuh (160 mm^2 per kW) in excess of 400 000 Btuh (120 kW). This opening or openings shall be located or ducted to a point no more than 18 inches (450 mm) nor less than 6 inches (150 mm) above floor level. These air supply opening requirements shall be in addition to the air opening for ventilation air required in Clause 9.1.1 (See also Clause 4.1.4).

9.1.3 When air supply is provided by natural air flow from outdoors for a power burner and there is no draft regulator, draft hood or similar flue gas dilution device installed in the same space, in addition to the opening for ventilation air required in Clause 9.1.1, there shall be a permanent air supply opening or openings having a

total cross-sectional area of not less than 1 inch^2 for each 30 000 Btuh (70 mm per kW) of the total rated input of the burner or burners and the location of the opening or openings shall not interfere with the intended purpose of the openings for the ventilation air referred to in Clause 9.1.1 (See also Clause 4.1.4).

9.1.6 When air supply ducts are used to meet the requirements of Clauses 9.1.2 or 9.1.3, their discharge opening shall be located where there is no possibility of cold air affecting steam or water pipes and electrical or mechanical equipment.

9.2 Manually Operated Valves

9.2.2 An accessible, identified emergency manual shut-off valve shall be provided in the gas supply to a boiler room or confined area where the total appliance input is in excess of 2,000,000 Btuh (600 kW) and the valve shall,

a) be located outside the boiler room or confined area;

b) comply with Clause 10.18.1;

c) have a handle or appropriate wrench that is readily accessible and identified; and

d) have its location indicated by means of a permanent legible sign adjacent to each entrance to the boiler room or confined area.

9.2.3 A valve forming part of the distributor's installation may be used in lieu of the valve required under Clause 9.2.2 if,

a) the distributor approves, and

b) the valve is readily accessible and identified.

10 PIPING AND TUBING SYSTEMS, HOSE AND FITTINGS

10.1 General

10.1.1 A gas piping system shall consist of steel piping and fittings and shall meet the requirements of subsection 10.2.

10.1.2 Any piping, tubing or fitting may be new or used, provided it has not been used for any other purpose than for conveying propane or gas and meets the requirements of Clause 10.1.3.

10.1.3 Any piping, tubing or fitting, if removed from any gas installation, shall not be reused unless it has been thoroughly cleaned, inspected and ascertained to be equivalent to new material.

10.1.4 Tubing shall not be used indoors and all references to tubing in this section shall be interpreted accordinly.

10.1.5 Copper tubing is permitted for outdoor use only and shall meet the requirements of subsection 10.2.

10.1.6 Plastic piping and tubing is permitted for underground use only and shall meet the requirements of subsection 10.25.

10.2 Material

10.2.1 Steel piping shall be black and shall comply with CSA Standard B63 "Welded and Seamless Steel Pipe".

10.2.2 A fitting used with steel pipe shall be of malleable iron or steel and shall comply with ANSI Standard B16.3 "Malleable-Iron Screwed Fittings".

10.2.3 Gas piping with operating pressurs not exceeding 125 psig (860 kPa) shall be at least Schedule 40. Gas piping with operating pressures over 125 psig (860 kPa) shall be at least Schedule 80 if joints are threaded, or threaded and back welded. At least Schedule 40 shall be used if joints are welded or welded and flanged.

10.2.4 Type GP tubing shall meet the requirements of ASTM Specification B75-79 and Types K and L copper tubing shall meet the requirements of ASTM B88-78 and it shall be internally tinned when required by the enforcing authority.

10.2.5 Tubing fittings shall be rated for a working pressure of not less than 125 psig (860 kPa) for operating pressures of 125 psig (860 kPa) or less. For higher operating pressures, tubing and fittings shall be rated for a minimum of 250 psig (1725 kPa).

10.2.6 Any copper tubing used above ground shall be either Type K or L up to and including $1\frac{1}{4}$ inch nominal size or Type GP of not less than 3/8 inch nominal size.

10.2.7 Copper tubing for underground use shall be Type K only and any portion of the copper tubing above-ground shall be protected against physical damage in a manner acceptable to the gas distributor.

10.2.9 Every hose and hose fitting shall have a minimum working pressure of 350 psig (2400 kPa) and shall comply with either Standard CAN1-8.1 "Elastomeric Hose and Hose Couplings for Conducting Propane and Natural Gas" or CAN1-8.3 "Thermoplastic Hose and Hose Couplings for Conducting Propane and Natural Gas".

10.2.10 Plastic piping, tubing and fittings shall comply with CSA Standard B137.4 "Polyethylene Piping Systems for Gas Service".

10.6 Pressure Inside Buildings

10.6.1 The gas pressure in a piping system extending from the termination of the utility installation shall not be higher in normal operation than that shown in Table 10.6.1.

TABLE 10.6.1

Type of Building	Maximum pressure, psig (kPa)	
	Other than Central Machine Room	Central Machine Room
One and two-family dwellings, row housing	½ (3.5)	-
Hotels & Motels	5 (35)	20 (140)
Residential, other than one and two-family dwellings and row housing	5 (35)	20 (140)
Institutional and Assembly	5 (35)	20 (140)
Commecial	20 (140)	20*(140)
Industrial	60 (410)	60 (410)
Central Heating	-	60 (410)

* 60 psig (410 kPa) is permissible in machine rooms located on the roof of commercial buildings

APPENDIX B

EXTRACTS

INSTALLATION CODE

CAN 1 B149.2-1976

PROPANE BURNING

APPLIANCES AND EQUIPMENT

7 REQUIREMENTS FOR THE FIELD CONSTRUCTION APPLIANCES

7.2 Appliance and Pilot Pressure Regulators

7.2.2 When an appliance pressure regulator is required by Clause 7.2.1 the propane supply to the pilots shall be regulated by an approved pressure regulator independent of the main burner propane supply.

7.2.7 Pressure regulators shall be equipped with a vent line leading outdoors in accordance with Clause 11.8.1

7.3 Pilots and Pilot Supply Piping or Tubing

7.3.1 Pilots shall be located, firmly secured and adequate to ensure safe and reliable ignition of the main burner.

7.3.2 The input to a continuous pilot shall not exceed 3% of the maximum rated input to the main burner.

7.3.3 The input to either an intermittent or interrupted pilot shall not exceed 5% of the maximum rated input to the main burner.

7.3.4 Where either an intermittent or interrupted pilot is used, the appliance control system shall provide, prior to the ignition cycle, a proven purge period equal to at least four air changes of the combustion zone and flue passages at an air flow rate of not less than 50% of that required at maximum input.

7.3.5 Subject to clause 7.2.2 the propane supply to pilots shall be through piping or tubing firmly secured and shall be connected to the main propane supply line.

7.3.6 Pilots shall be independently controlled by a ¼ turn shut-off valve located upstream of all other components of the pilot.

10. PIPING AND TUBING SYSTEMS, HOSE, AND FITTINGS

10.1 General

10.1.1 Propane piping or tubing systems shall be of steel piping and fittings and/or steel or copper tubing, all meeting the requirements of Section 10.2 used to convey propane from the point of supply to the inlets of appliances.

10.1.2 Piping, tubing and fittings shall be new, or used provided they have not been used for any other purpose than for conveying propane or gas, and shall meet the requirements of Clause 10.13.

10.2 Material

10.2.1 Steel piping shall be black and shall comply with CSA Standard B63, Welded and Seamless Steel Pipe.

10.2.2 Fittings used with steel pipe shall be of malleable Iron Fittings.

10.2.3 Propane vapour phase piping with operating pressures not exceeding 125 psig shall be at least Schedule 40. Vapour phase piping with operating pressures over 125 psig and all liquid piping shall be at least Schedule 80 if joints are threaded, or threaded and back welded. At least Schecule 40 shall be used if joints are welded or welded and flanged.

10.3.2 Piping and Tubing Systems Operating at Pressures ½ psig or Less

10.3.2.1 Piping and tubing systems operating at pressures ½ psig or less shall be designed so that the loss in pressure between last stage regulators and appliances shall not exceed 0.5 in w.c. The minimum size of pipe, tubing and fittings shall be in accordance with Appendix B.

12. CYLINDER SYSTEMS

12.5 Storage of Cylinders Awaiting Use or Sale

12.5.3 General

12.5.3.1 Cylinders in storage shall not be exposed to temperatures in excess of 125F, open flames or similar sources of ignition, or damage, and be protected from tampering by fencing or equivalent method of protection.

12.5.3.2 Cylinders, empty or filled, which require cylinder valve protecting caps shall have such caps in place while in storage.

12.5.3.3 Cylinders which have been in service shall be stored outdoors.

12.5.3.4 Cylinders in storage shall have the cylinder valves closed.

12.5.3.5 Subject to Section 12.5.8 cylinder storage areas, docks, buildings or special rooms, shall be located a minimum distance of 25 ft from adjoining line of property occupied by schools, churches, hospitals, athletic fields, or other points of assembly either public or private.

12.5.3.6 Areas beneath cylinder docks shall be well ventilated and enclosed, not necessarily by the fence specified in Clause 12.5.4.1, to prevent access and accumulation of combustible material, or the space shall be occupied by well tamped earth.

12.5.3.7 Readily ignitable material including weeds and long dry grass shall be removed from within 10 ft of any cylinder storage area.

12.5.3.8 The electrical equipment and fixtures installed within buildings or within special rooms used for the storage of cylinders shall be in accordance with Class I Division II for hazardous locations requirements of CSA Standard C22. 1, Canadian Electrical Code, Part I.

12.5.3.9 The electrical equipment and fixtures required for outdoor cylinder storage areas, that are installed within 25 ft, measured on a horizontal plane of the storage area, and 10 ft on a vertical plane above the cylinder relief valves, shall be in accordance with Clause 12.5.3.8

12.5.4 Storage of Cylinders for Use or Sale Located Outdoors

12.5.4.1 Subject to Clause 12.5.4.2 and Section 12.5.5 cylinders stored outdoors shall be fenced in accordance with one of the following methods:

a) (i) The fence shall be at least 6 ft high and may include three strands of barbed wire at the top, spaced 4 in apart.

12.5.4.2 Cylinders stored outdoors against an industrial building on the property of the user, may be stored meeting the requirements of Section 12.5.3 except the fencing required by Clause 12.5.4.1 is not mandatory, provided:

a) they are 25 ft from any other building, property line or points of assembly either public or private.

b) the quantity stored does not exceed 1,000 lb of propane,

c) the relief valves on the cylinders are not less than 3 ft horizontally from any building opening that is below the level of the relief valve discharge, and

d) the relief valve discharge is not less than 10 ft on a horizontal plane from the air intake of any appliance or air moving equipment.

12.5.4.3 "NO SMOKING" signs shall be prominently displayed at areas used for storing sylinders awaiting sale. These signs shall be in accordance with Clause 13.10.3.

13.2 Relief Valves

13.2.1 Each propane tank shall be provided with one or more relief valves meeting the requirements of the Boiler and Pressure Vessel Inspection Authority of the Province in which it is to be installed.

APPENDIX C

EXTRACTS

CSA STANDARD B139-1971

INSTALLATION CODE

FOR

OIL BURNING EQUIPMENT

3. GENERAL REQUIREMENTS

3.6 Responsibility of Installer. After installation of, or after alteration to or addition to, oil burning equipment, the installer shall make certain that such equipment is operating in a safe and acceptable manner as recommended by the manufacturer in the instructions, and that all safety devices are functioning properly.

3.14 Fuel Oil Filter. A suitable fuel oil filter or strainer, shall be provided in the fuel supply line to the oil burner.

3.16 An emergency shut-off device

3.16.1 An emergency shut-off device shall be:

Provided on each oil burner installation, except on the installation of approved oil burning stoves with integral tanks, to manually stop the flow of oil to the burner.

4. VENTING AND AIR SUPPLY

4.1 General

4.1.1 When an oil burning appliance is located within a building, provision shall be made to vent the products of combustion safely to outside the building.

4.1.2 When an oil burning appliance is located within a building sufficient air for combustion of the oil and ventilation of the appliance shall be supplied to the space wherein the appliance is located.

4.2 Venting Products of Combustion

4.2.1 General. The venting facilities shall be adequate to assure no hazard from the products of combustion.

4.2.2.5 When forced or induced draft fans are used:

a) The chimney shall be capable of handling the flue gases when such fans are operating; and

b) Upon the failure of air-flow, the supply of fuel to the main burner shall be automatically shut off.

4.2.2.8 A chimney flue shall extend at least 3 feet above the highest point at which the chimney comes in contact with the roof, and not less than 2 feet above the highest roof surface or structure within 10 feet horizontally of the chmney. Not more than 8 inches of chimney flue above the top of the chimney cap may be considered in computing this height.

4.2.5 Flue Pipes

4.2.5.1 The flue pipe shall be in good condition and when used on appliances relying on natural draft it shall be not smaller in cross sectional area than the flue collar of the appliance.

4.2.6 Flue Pipe Dampers

4.2.6.1 A manually operated damper shall not be placed in the flue pipe of an oil fired appliance, except stoves using sleeve type burners or as permitted by Clause 4.2.6.2.

4.3 Air for Combustion and Ventilation

4.3.1 General

4.3.1.1 Oil burning appliances shall be installed only where:

a) An adequate supply of combustion air is available to assure proper combustion;

b) Ambient air temperatures are maintainedwithin safe operating limits; and

c) Provision is made to compensate for the air drawn from the area by other appliances such as exhaust fans, clothes dryers or fireplaces.

Note: See Appendix A for data on supply of air for combustion and ventilation.

5. TESTS

5.1 Tests and Observations. The following tests and observations shall be made, where applicable, after installation of, or after alteration to, or addition to, oil burning equipment:

a) Determine that correct components are installed;

b) For an atomizing type burner, observe that a nozzle of the correct spray type, capacity, and spray angle is installed. For a vaporizing type burner, determine that the flow rates are correct;

c) Determine that the fuel pump pressure is correct;

d) Determine that the operating controls are in satisfactory condition;

e) Determine that the limit controls will operate properly at the correct temperature and/or pressure;

f) Determine that the combustion safety control operates properly regarding:

(i) Draft in chimney, in flue outlet, and over-fire;
(ii) Smoke density of the flue gases;
(iii) Temperature of the flue gases;
(iv) Analysis of the flue gases;

h) Determine that all oil connections are tight

5.2 Requirements

5.2.1 Test Point Location

5.2.1.1 The location at which flue outlet draft and flue outlet temperature, and samples for smoke density and flue gas analysis are to be taken, shall be:

a) At the centre line of the flue pipe; and

b) Not more than 18 inches downstream from the flue collar; and

c) Between the flue collar and draft regulator, if used.

5.2.4 Temperature

5.2.4.1 The measured flue outlet temperature (total) of the flue gases shall not exceed 750F except when the equpment is approved for a higher temperature.

Note: The temperature sensing element should be shielded from radiant heat from any source upstream from the test location.

5.2.4.2 The measured temperature (total) of the flue gas at the entrance to the chimney shall be not less than:

a) 350F when less than 40 per cent of the chimney outer surface is exposed to outdoors; and

b) 400F when:

(i) More than 40 per cent of the chimney outer surface is exposed to outdoors; or

(ii) The chimney is unlined.

Note: Lower flue gas temperatures at the chimney or venting device may be permitted when adequate provisions are made for the effects of condensation.

5.2.5 Analysis of Flue Gases. The percentage of carbon dioxide in the flue gases shall be within the limits specified in the instructions.

5.2.6 Functioning of Safety and Operating Controls. The safety and operating controls shall function within the limits specified for the type of equipment.

5.2.7 Fuel Input. The fuel input shall not exceed the fuel input specified in the instructions for the equipment.

6. SUPPLY TANKS

6.2 Supports, Foundations and Anchorage for All Tank Locations

6.2.4 When a tank is located in an area that may be subjected to flooding, to prevent floating, the tanks shall be securely anchored to a concrete slab equal in weight to the displaced water.

6.3 Tanks Installed Underground

6.3.1 Spacing between two adjacent underground tanks shall not be less than two feet.

6.3.2 An underground tank shall be installed in such a manner that the foundation of any building will not be endangered, and shall be located so that the distance, measured horizontally from the nearest point of the shell to the nearest line of adjoining property that may be built on, or to the nearest outside wall of any basement or pit, shall be not less than 3 feet for tanks of 2,000 gallon or less capacity and not less than 10 feet for tanks of over 2,000 gallon capacity, unless a lesser distance is authorized by the authority administering this Code.

6.3.3 A tank shall not be installed under a building unless authorized by the authority administering this Code.

6.3.4 An underground tank shall:

a) Be placed in the excavation with care; and

b) Be set on a firm foundation; and

c) Be surrounded with at least 12 inches of non-corrosive inert materials, such as clean earth or sand, well tamped in place; and

d) (i) Be covered with a minimum of 3 feet of earth, on top of which shall be placed a slab of reinforced concrete not less than 4 inches thick.

(ii) Be covered with a minimum of 2 feet of earth, on top of which shall be placed a slab of reinforced concrete not less than 4 inches thick.

Note: Rolling a tank into position can break a weld, puncture or damage the tank metal or scrape off the protective coating.

6.3.5 When an underground tank is likely to be subjected to traffic, it shall be protected against damage by vehicles passing over the tank by:

a) At least 3 feet of earth cover, on top of which shall be placed a slab of reinforced concrete not less than 4 inches thick and extending at least 1 foot horizontally in all directions beyond the outline of the tank; or

b) At least 18 inches of well tamped earth, on top of which shall be placed a slab of 6 inches of reinforced concrete or 8 inches of asphaltic concrete, extending at least 1 foot horizontally in all directions beyond the outline of the tank.

6.3.8 All connections to an underground tank shall be made through the top of the tank except as permitted in Clause 10.

6.4 Supply Tanks, Installed, Unenclosed, Inside Buildings

6.4.1 Tanks unenclosed inside a building shall conform to the following:

a) A supply tank not larger than 10 gallons shall be specifically approved for the purpose;

b) An approved safety can may be used as a storage tank;

c) A supply tank larger than 10 gallons shall be constructed in accordance with Clause 6.1.2;

d) A tank shall be of such size and shape that it can be installed in and removed from the building as a unit;

e) The capacity of an auxiliary supply tank shall not be more than 50 gallons.

6.4.3 In the lowest storey, cellar, or basement of any building, the capacity permitted shall be in accordance with the following:

a) The capacity of any one tank shall not exceed 500 gallons; and

b) The total capacity of tanks shall not exceed 1,00 gallons unless fire separation having a fire resistance rating of not less than two hours is provided for each 500 gallons of tank capacity (see Clauses 6.5.5 and 6.5.6).

c) When the total capacity of tanks connected to one supply line exceeds 500 gallons, all connections shall be through the top of the tank, and the transfer of oil to and from the consuming appliance, shall be by pump only and through continuous piping.

6.4.4 A tank, unenclosed, shall be located:

a) So that the temperature of the oil in the tank will not exceed 100F; and

b) So that the horizontal distance from the tank to any fuel fired appliance shall not be less than 5 feet except when approved as part of an appliance or as permitted by Clause 6.4.5.

6.4.7 A shut-off valve shall be provided immediately adjacent to the burner supply connection at the supply tank.

6.6 Supply Tanks, Not Over 500 Gallon Capacity, Installed Outside Aboveground

6.6.3 Tanks shall not block means of egress from a building.

Note: Means of egress is generally considered to provide a clearance to the tank of 5 feet, in any direction from the door or lowest step.

6.7 Supply Tanks, Over 500 Gallon Capacity, Installed Aboveground Outside

6.7.2 Every supply tank shall be diked where in the event of an escape of fuel, the fuel is likely to flow in a manner that would:

a) Create a hazard to public health or safety;

b) Contaminate any fresh water source or waterway;

c) Interfere with the rights of any person; or underground stream or drainage system.

6.7.3 The dike referred to in Clause 6.7.2 shall have dimensions that will ensure that the volume of liquid it will contain is equal to:

a) Where the dike contains a single tank, 100 per cent of the capacity of that tank

6.8 Filling of Supply Tanks

6.8.1 All supply tanks shall be provided with a fill opening or a fill pipe complying with Clause 8.2.1 or 8.2.2

6.8.2 Each fill opening and the entry to each fill pipe shall be provided with a tight metal cover designed to discourage tampering.

6.8.5 The entry to a fill pipe, required by Clause 6.8.4, shall be outside buildings and shall be located at an elevation lower than the termination of the vent pipe from the tank served by the fill pipe.

6.8.6 A fill pipe which has the entry to it adjacent to a building shall be installed sot that the entry shall be a point not less than 2 feet from any window intended to be opened or other building openings, or vertical projection of any window or building opening at a lower elevation than the entry to the fill pipe.

6.9 Venting of Supply Tanks

6.9.1 Each supply tank over 10 gallons capacity shall be provided with means for venting, complying with Clause 8.3 in regard to piping.

TABLE 3

MINIMUM DIAMETER OF VENT OPENING, VENT PIPE

Capacity of Tank, Gallon	Inside Minimum Diameter of Vent or Iron Pipe Size, Inch
500 or less	1¼
over 500 to 2,500	1½
over 2,500 to 8,500	2
over 8,500 to 16,600	2½
over 16,600 to 30,000	3

Note: Where tanks are filled by the use of a pump through tight connections, special consideration should be given to the size of the vent pipe to insure that it is adequate to prevent the development of abnormal pressure in the tank during filling.

6.9.4 The lower end of the vent pipe shall be connected:

a) At the top of the tank and shall not extend into the tank more than 1 inch;

b) To a vent alarm.

6.10 Gauging of Supply Tanks

6.10.1 All supply tanks, except oil tanks on which the fuel level is maintained by an automatic pump, shall be privided with means for determining the liquid level within the tank.

Note: On an outside supply tank, means may be by visual observation through the fill opening, by use of a measuring stick, or by use of an approved fuel level gauge.

6.10.2 Supply tanks installed inside a building shall be provided with an approved gauge

6.10.3 Gauging by means of a dip stick shall not be permitted inside a building.

8. FUEL OIL PUMPS, PIPING, TUBING, AND VALVES

8.2 Fuel Oil Pumps

8.2.2 The maximum pressure imposed on the inlet of a fuel oil pump shall be 5 psig unless the pump has been approved for a higher inlet pressure

8.2.3 The maximum lift, measured from the bottom of the supply tank, imposed on a fuel oil pump shall be 16 feet.

8.2.4 When the fuel oil pump is located above the supply tank, the pump and supply piping shall be installed to avoid air locks, and:

a) A two pipe system shall be used;

b) When the lift is above 8 feet, a two stage pump shall be used;

c) When the burner fuel oil pump is more than 16 feet above the bottom of the supply tank, an auxiliary pump shall be used. The auxiliary pump and controls shall be approved for the intended application.

8.3 Piping and Tubing

8.3.1 All piping and tubing, except as permitted by Clause 8.3.4 shall be new and be standard weight wrought iron, steel, or brass pipe; or brass, copper, or steel tubing; or the equivalent with respect to strength, durability, resistance to corrosion, and temperature.

8.3.3 Piping used in the installation of oil burning appliances shall not be smaller than 3/8-inch iron pipe size, or 3/8-inch (outside diameter) tubing having a wall thickness conforming to that specified in CSA Standard B140.0, General requirements for Oil Burning Equipment, except that 1/4-inch iron pipe size and 5/16-inch tubing may be used with burners having a firing rate of less than 1/2 U.S. gallon per hour.

8.3.8 Oil piping shall not be supported by any other piping but shall be installed with supports that shall not be spaced at greater distances than those shown in Table 6 and shall be of a sufficient strength and quality to support the piping.

TABLE 6

SPACINGS OF SUPPORTS

Pipe Size Inches	Spacing of Supports Feet
up to 1/2	6
3/4 to 1	8
1 1/4 to 2 1/2	10
3 to 4	15
5 to 8	20
Over 8	25
1 1/4 or larger	Also every floor level on vertical

8.3.11 Piping and tubing joints, and connections shall be made in accordance with the following:

a) Joints and connections shall be made fuel oil tight.

b) Joints and connections shall be made with standard pipe fittings or by welding.

c) Welded connections shall be made by a welder acceptable to the authority administering this Code.

Note: It is recommended that all concealed piping be welded wherever possible.

e) Unions requireing gaskets or packing, right and left couplings, and solder or brazing materials having a melting point less than 1,000 F shall not be used in connecting fuel oil lines.

8.4 Valves

8.4.1 A shut-off valve shall be installed in the fuel line in accordance with Clause 8.3.11 and as near as practicable to the exit from the supply tank and at such other locations as may be required to avoid spillage during servicing and shall be:

a) Of the manual type;

b) Readily accessible;

c) Installed to close against the supply of fuel oil; and

d) Of a type suitable for the intended service.

8.4.2 When a shut-off valve is installed in the return line from the fuel oil pump, a suitable pressure relief valve shall be installed in a return line and shall be:

a) Located in the return line between the pump and the shut-off valve; and

b) Arranged to:

(i) Return the surplus fuel oil to the supply tank; or

(ii) By-pass the surplus fuel oil around the pump.

APPENDIX A

AIR FOR COMBUSTION AND VENTILATION

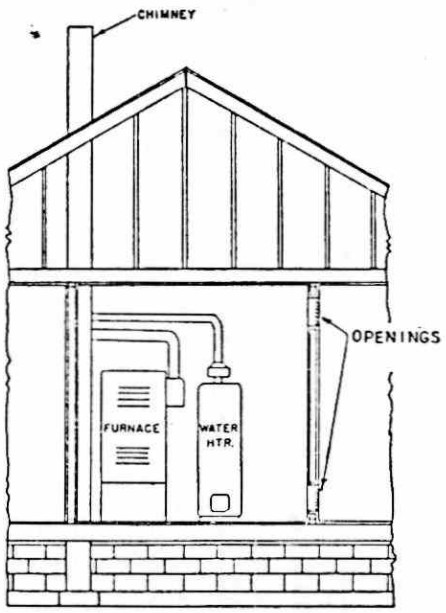

FIGURE A1

APPLIANCES LOCATED IN CONFINED SPACES,
ALL AIR FROM INSIDE THE BUILDING

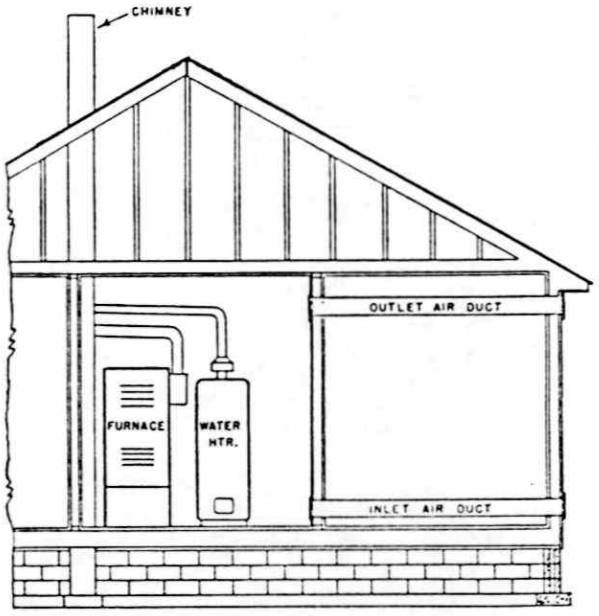

FIGURE A2

APPLIANCES LOCATED IN CONFINED SPACES,
ALL AIR FROM OUTDOORS

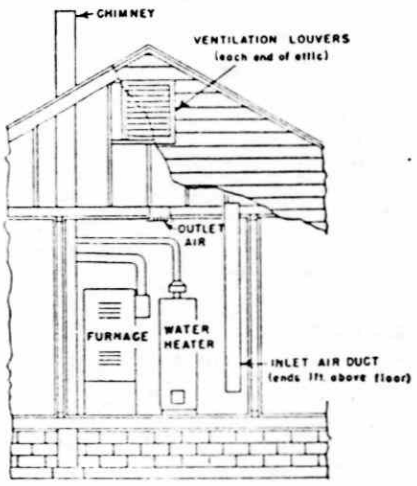

FIGURE A3

APPLIANCES LOCATED IN CONFINED SPACES,
ALL AIR FROM OUTDOORS THROUGH VENTILATED ATTIC

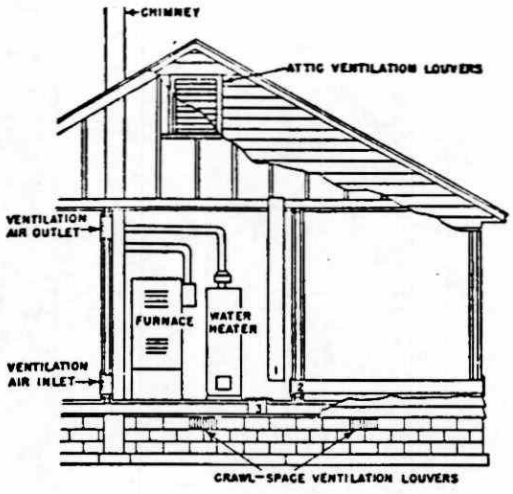

FIGURE A4

APPLIANCES LOCATED IN CONFINED SPACES,
AIR FROM INSIDE BUILDING —
COMBUSTION AIR FROM OUTSIDE, VENTILATED
ATTIC OR VENTILATED CRAWL SPACE

NOTES: *1. Ducts used for make-up air may be connected to the cold air return of the heating system only if they connect directly to outdoor air.*

2. Attic ventilation louvres are required at each end of the attic with alternate air inlet No. (1).
Nos. (1), (2), and (3) indicate alternate locations for air from outdoors.

3. Crawl-space ventilation louvres for unheated crawl spaces are required with alternate air inlet No. (3).

FIGURE A4

APPLIANCES LOCATED IN CONFINED SPACES,
AIR FROM INSIDE BUILDING -
COMBUSTION AIR FROM OUTSIDE, VENTILATED
ATTIC OR VENTILATED CRAWL SPACE

APPENDIX B

INFORMATION CONCERNING THE SUITABILITY OF MASONRY OR CONCRETE CHIMNEYS AND FLUES (REFER TO CLAUSE 4.2.2)

TABLE B1

RECOMMENDED DIMENSIONS FOR CHIMNEY FLUES

Total Rated Input GPH (U.S.)	Minimum Size of Rectangular Tile Liner Nominal Inches		Height of Chimney Above the Flue Pipe Entry Feet
	Outside	Inside	
Up to 0.75	8 x 8	6.75 x 6.75	15
Over 0.75 to 1.25	8 x 8	6.75 x 6.75	20
Over 1.25 to 2.00	8 x 8	6.75 x 6.75	25
Over 2.00 to 3.00	8 x 12	6.75 x 9.75	25
Over 3.00 to 4.50	12 x 12	9.75 x 9.75	30

NOTES: 1. *Sizes shown in Table B1 are for average conditions. Exact requirements should take into consideration the type of appliance, chimney height, flue gas temperature, and the required draft. For example, a higher chimney may permit reduction in the cross-sectional area.*
2. *When rated output capacity exceeds that shown in the Table, the manufacturer's recommendations should be followed.*
3. *Actual inside dimensions of the tile liner are usually less than the nominal.*
4. *For two or more appliances, the total input should be totalled.*

FIGURE B1

ANALYSIS OF CHIMNEY FAULTS

Symbol	Trouble	Disclosed by	Remedy
A	Top of Chimney Lower than Building	Observation	Extend Chimney (See Figure 1)
B	Chimney Cap or Ventilator	Observation	Remove
C	Coping Restricts Opening	Measurement	Make Opening Equal to Inside of Chimney
D	Broken Tile Wedged in Chimney	Lowering Light or Weight Down Chimney	Break Tile with Weight on Wire or String
E	Birds Nests	Observation	Remove
F	Joists Protruding into Chimney	Lowering Light or Weight Down Chimney	Remove Projecting Portion to Clear Chimney
G	Leakage Between Loose Jointed Tile	Smoke Test with Top of Chimney Closed	Rebuild Chimney with Course of Brick between Tiles
H	Debris Accumulated in Offset	Lowering Light or Weight Down Chimney	Break Out with Rod or Weight
J	Unused Flue or Vent Connection	Observation	Remove
K	Smoke Pipe Extends into Chimney	Lowering Light or Weight into Chimney	Make End Flush with inside of Chimney
L	Offset	By Lowering Light or Weight Down Chimney	Change to Straight or Long Offset
M	Loose Fitted Smoke Pipe	Smoke Test	Close Leaks with Cement
N	Loose Fitted Cleanout Door	Smoke Test	Close Leaks with Cement
O	Opening between Flues	Smoke Test	Close Openings Permanently
P	Chimney Too Small Chimney Too Large Chimney Too Short	Measurement Measurement Measurement	Rebuild Rebuild Extend or Rebuild

APPENDIX D

CHARACTERISTICS OF GAS FUELS

GAS	HEAT VALUE BTU/FT^3	SPECIFIC GRAVITY or VAPOUR DENSITY	EXPLOSIVE LIMITS IN AIR % BY VOLUME		THEORETICAL AIR REQUIRED FOR COMPLETE COMBUSTION	MINIMUM IGNITION TEMPERATURE	MAXIMUM FLAME TEMPERATURE	FLAME SPEED(Ft PER SECOND)	AUTO IGNITION TEMPERATURE
			LOWER	UPPER					
METHANE	913.1	0.55	5	15	9.56 to 1	1170°F (632°C)	3484°F (1918°C)	0.85	1000°F (538°C)
NATURAL GAS	1027	0.6	4.9	15	10.00 to 1	1170°F (632°C)	3562°F (1961°C)	0.99	1000°F (538°C)
PROPANE	2385	1.52	2.10	10.10	23.9 to 1	898°F (481°C)	3573°F (1967°C)	0.95	871°F (466°C)
DIGESTER GAS	500-800	Variable*	5.7	13.5	Variable*	-	-	-	-
FUEL OIL NO. 2	18,190-19,810**	.898			74.6 to 1	494°F (257°C)	2600°F (1427°C)	NA	800°F (427°C)

* Quality of gas varies with content of impurities

** Heat value is btu per lb. of fuel oil

SUBJECT:

COMBUSTION

TOPIC: 5

PRINCIPLES OF COMBUSTION

OBJECTIVES:

The trainee will be able to:

1. Outline the three conditions that must be maintained in a furnace - the "three T's of combustion";
2. State why excess air is used;
3. List the methods used to increase the effect of the "three T's of combustion";
4. Describe how soot and smoke are formed;
5. List four conditions which should be looked for if a furnace produces smoke.

PRINCIPLES OF COMBUSTION

GENERAL

Combustion is the rapid high temperature oxidation of fuels. Since most fuels used at present consist almost entirely of carbon and hydrogen, burning involves the rapid oxidation of carbon to carbon dioxide or carbon monoxide, and of hydrogen to to water vapour. The following overall reactions occur:

$$C + O_2 \longrightarrow CO_2 + Q$$

where Q = 14,093 BTU/lb carbon

$$2H_2 + O_2 \longrightarrow 2H_2O + Q$$

where Q = 61,000 BTU/lb hydrogen.

In practical cases the fuel is not pure hydrogen or carbon, but is combined into gases such as methane or propane, complex hydrocarbon mixtures as liquids, and solid and tarry materials in solid fuels. Mineral ash, sulphur and trace metals may be combined with the fuels, and will produce a wide range of contaminants. The oxygen required for combustion is normally supplied in air, which contains approximately 79% nitrogen by volume. Although nitrogen is normally considered inert, this gas can react with oxygen at high temperatures to produce oxides of nitrogen, a significant air contaminant.

The basic requirements for practical gas phase combustion are:

1. A point source of high energy output.
2. A flammable mixture of combustible gases and air.
3. Thorough mixing at the point of ignition and flame propagation.
4. A carefully designed flame holder.
5. Provision of space for burnout.
6. A heat sink.
7. Removal of combustion products from the reaction zone.

3Ts of Combustion

Temperature, Turbulence and Time, the classic 3Ts of combustion, are widely quoted but frequently misunderstood.

Temperature

The flammable gas mixture must be raised to its threshold ignition temperature. Heat must be available to ensure auto-ignition. This heat may come from an ignitor, from recirculated fuel gas or from flame radiation. A high temperature is also required to maintain burnout of the reactants.

Ignition energy can be supplied electrically with a high tension arc or spark or with a combination spark fuel ignitor. Once the fuel is ignited and a stable flame is established, radiation from the flame or hot recirculated gas may be enough to maintain ignition of raw fuel. With solid fuel beds the incoming fuel is usually ignited by contact with the hot fuel bed.

Temperature downstream of the fuel air mixing zone can be maintained by proper design of any heat exchanger which may be integral with the combustion equipment, or by controlling the rate of withdrawal of combustion products. The physical size, configuration and material of construction of any enclosure are important considerations. The ability to absorb and/or re-radiate the heat released will significantly affect the bulk gas temperature.

Turbulence

Thorough mixing is required at the point of ignition and the propagation zone to ensure that sufficient successful collisions occur between reactants to initiate and propagate the combustion reaction. Once active ions are in contact, mixing is not essential. This mixing can be achieved by physical means or aerodynamic means.

The common "physical means" are the employment of bluff bodies or baffles judiciously arranged to change the direction of the fuel air stream in a manner that promotes thorough mixing; in some cases vigorous back-mixing is promoted, and standing vortices are formed.

The combustion air can be introduced in patterns which cause violent radial and tangential motion of the fuel-air stream, and increase the possibility of successful collisions between the reactants. This is accomplished by introducing the air through orifices, annuli, and slots at high velocity. In Solid fuel burning, it may be necessary to introduce air above the bed to promote combustion of volatile material and intermediate compounds produced in the bed. In modern burner applications, the air may be introduced to provide a two stage combustion effect. The first stage is proportioned to be fuel rich and the second to be oxygen rich. This provides optimum conditions for maximum fuel burnout with fewer side reactions.

Time

Time is required to complete the reaction downstream of the zone of ignition and flame propagation.

The initiation and propagation stages of the combustion reaction occur in a matter of milliseconds. The final stage of the reaction requires some finite time, which is temperature and concentration dependent, and varies with molecular structure.

The time required for complete combustion of a given material can be determined theoretically. This theoretical time is based upon perfect mixing i.e. a maximum collision frequency in the reaction mixture. In practical systems, mixing is imperfect and the conditions for optimum propagation are not always obtainable. Practical combustion systems require conservative sizing of the enclosure in order to ensure that combustion is virtually complete in the gaseous phase.

Air in Combustion

The large majority of combustion systems use air as the source of oxygen for the combustion reaction, because

1. It is readily available and cost is limited to the equipment and energy required to pump it into position.

2. It contains a natural diluent, nitrogen, which is a useful heat sink or energy acceptor and product gas diluent. This aids in moving the combustion reaction toward completion.

3. The total mass of air exceeds the mass of oxygen required by roughly 3.3/1; this extra mass is useful for generating mixing momentum.

4. By acting as a heat sink it reduces flame temperatures and prevents destruction of the enclosure.

5. A combustion reaction can be moved closer to completion by having excess of one reagent present. Oxygen carried in air is the most practical excess reagent to supply.

There are certain disadvantages:

1. Improperly mixed or directed excess air inhibits the combustion process by chilling the propagation reaction and breaking the reaction chain. Frequently unburned fuel or carbon may be emitted as a result.

2. Nitrogen can react with oxygen at high temperature to produce oxides of nitrogen; when excess oxygen is present, oxides of nitrogen will be formed and emitted.

3. If a fuel contains sulphur, and excess oxygen is available, some of the sulphur dioxide produced will be oxidized to sulphur trioxide. The sulphur trioxide combined with water vapour produces sulphuric acid, which can be absorbed on any carbon deposits in the system if the temperature drops to dewpoint. The resulting acid smut can corrode the combustion system or be discharged to the atmosphere to cause soiling and corrosion.

Practical combustion systems operate with excess air, the variation of excess air with load depending upon combustor design and the air-fuel ratio control system fitted to the combustion system. Some modern boilers operate at 3 to 5% excess air when firing oil or gas. Most contemporary systems operate at 15 to 50% excess air.

Smoke is a highly visible cloud of particles which is persistent in nature i.e., does not readily dissipate. These particles are usually finely subdivided and produce the light scattering phenomenon which registers on the human eye as a visible plume. The particles may be carbon, unburnt hydrocarbon, or mineral ash.

The common black or grey smoke is produced by fine carbon particles which result when a reacting fuel air mixture is chilled - by contact with a cold surface or by tramp air. Fine carbon particles are formed which are carried out of the system as smoke. If sufficient cool surface is present these particles will deposit on the surfaces of the combustion system as soot. Starving the system of air will cause fuel cracking or pyrolysis and the same phenomenon will result.

If a furnace is producing smoke, one or more of the following four conditions may exist:

a. Insufficient air to burn the fuel
b. Too much air, which chills the flame rapidly
c. Insufficient or improper mixing of the air or fuel
d. Cold surfaces or admission of tramp air to the system.

The most common visible emissions from combustion systems are:

Black or grey - carbon particles
Persistent blue white - hydrocarbon
Brown to grey - fly ash
Dissipating white - condensed water vapour.

Primary and Secondary Air

Primary air is the air that first mixes with the fuel. Secondary air is the additional air required to complete the process of combustion. The methods of providing primary and secondary air vary with the type of fuel being burned and the equipment burning it.

The air which flows in with the fuel is called primary air; that entering the furnace above the fire is secondary air. In this type of firing the fuel is fed to the furnace into the high temperature region of the furnace. The primary air flows through the fuel. The volatile matter distills off and burns to a mixture of carbon monoxide and carbon dioxide.

The oxygen that is in the primary air is practically all used up on its passage through the fuel, and the carbon monoxide from the fuel still requires to be burned off. In order to do this more oxygen is required, and this is provided by the secondary air supply. The flow of primary air through the fuel controls the rate of burning, but the secondary air completes the process of combustion.

Secondary air must be closely regulated according to the fuel used.

Excess Air

Combustion is the combination of the burning material with oxygen, and so it can happen only when oxygen is present. Chemically fuel consists mostly of carbon, and when fuel burns the carbon combines with oxygen in the air, the product being carbon dioxide. "Oxygen in the air" because, of course, air is a mixture containing, as we know, approximately 21% oxygen, 79% nitrogen, by volume.

If pure carbon with air is burned, the 21% oxygen would combine with the carbon and would show a flue gas containing 21% CO_2. Fuel, however, is not pure carbon, it contains some hydrogen, which burns to form water, using up some of the oxygen in the air. As a result, the perfect flue gas formed when fuel is burned in the least possible volume of air, contains less than 21% CO_2. In the case of a typical fuel oil, the perfect flue gas would measure about 15% CO_2.

In practice it is not possible to burn fuel oil in a boiler plant and get as much as 15% CO_2 in the flue gas, as that would require perfect mixing of air with fuel; the actual result of supplying only the minimum of air would be that some of the fuel could not get enough oxygen to burn completely. This would lead to the production of smoke and carbon monoxide, instead of carbon dioxide, and the loss of a great deal of heat up the stack.

To avoid the danger of such heat losses, an excess of air is always supplied.

If a typical fuel oil is burned with 50% excess air, the result is a flue gas with 10% CO_2. This is a good standard of performance in the ordinary oil fired boiler. Notice that in all these figures the nitrogen content of the air is ignored, as it plays no part in the process of burning, it is only a passenger heated in the furnace and passing through the boiler to the stack. However, it carries heat away with it, and to keep this loss of heat, as small as possible, the amount of air supplied to the furnace must be carefully controlled.

The 10% CO_2 represents good practice in the ordinary boiler burning fuel oil. Although this means supplying 50% excess air it is wiser to do that and to make sure all the gases are completely burned. Incomplete burning could cause greater heat losses than 50% excess air.

Typical percentages of CO_2 and corresponding percentages of excess air for various fuels are shown in Table next page.

Now it can be seen why the CO_2 readings are so important. A fall of 1 point in the CO_2 does not sound like very much, but the table shows that it means an enormous increase in the amount of excess air drawn through the boiler. The heat that this excess air carries away up the stack is by far the biggest waster of fuel.

TABLE 5-1

PERCENTAGES OF CO_2, O_2 AND THE CORRESPONDING PERCENTAGES OF EXCESS AIR

Fuel	CO_2 & O_2	Percentage Excess Air					
		0	20	40	60	80	100
Anthracite	CO_2	19.5	16.0	13.8	12.0	10.7	9.6
	O_2	0.0	3.5	6.1	8.0	9.4	10.6
Bituminous	CO_2	18.6	15.5	13.2	11.5	10.1	9.2
	O_2	0.0	3.5	6.0	8.0	9.5	10.6
Fuel oil	CO_2	15.5	12.6	10.6	9.3	8.2	7.4
	O_2	0.0	3.7	6.4	8.1	9.6	10.8
Natural gas	CO_2	12.2	10.0	8.5	7.5	6.5	5.7
	O_2	0.0	4.0	6.5	8.5	9.9	10.9

If the flue gas contains CO, add the sum of the CO_2 percentage to half the CO percentage to get the resultant CO_2 reading is 12% and the CO 2%, the equivalent CO_2 percentage is 12 + 1/2 x 2 = 13%.

SUBJECT:

COMBUSTION

TOPIC: 6

BURNERS AND BURNER CONTROLS

OBJECTIVES:

The trainee will be able to:-

1. State the function of a burner
2. Recall the three ways fuel oil is atomized
3. Explain, using a schematic diagram, the operation of a high pressure oil burner
4. Set the electrodes of a high pressure oil burner
5. Clean the air nozzle of a high pressure oil burner
6. Differentiate between Atmospheric Forced Draft and Induced Draft Burners
7. Recall the operation of
   a. Protector Relays
   b. A Flame Failure Device

BURNERS AND BURNER CONTROLS

GENERAL

In a WPCP three types of fuel, #2 furnace oil, natural gas and digester gas, may be used. The burners which heat the boilers can fire on oil, gas or a combination of both. Nevertheless, every burner does the same thing. It proportions the fuel and the air and mixes them in preparation for burning.

OIL BURNERS

Since all fuels burn as a vapour, the liquid oil must either be converted to a gas in the burner (vaporized) or divided into such small particles or droplets (atomized) that radiated heat will vaporize within the burner. If the temperature of the flame is too low, incomplete combustion and smoke emission will result. Cooling of the flame can occur when the combustion chamber is too small, resulting in flame impingement, or too large.

Oil droplets burn at the surface. The droplet shrinks in a manner analogous to peeling an onion, so it is necessary for turbulence to provide sufficient air to complete the combustion of each successive layer. Consequently, it is important to mix the air and oil.

Vaporizing burners gasify the oil by heating it within the burner. These burners are limited in the range of fuels they can handle and are used only for some residential furnaces and water heaters.

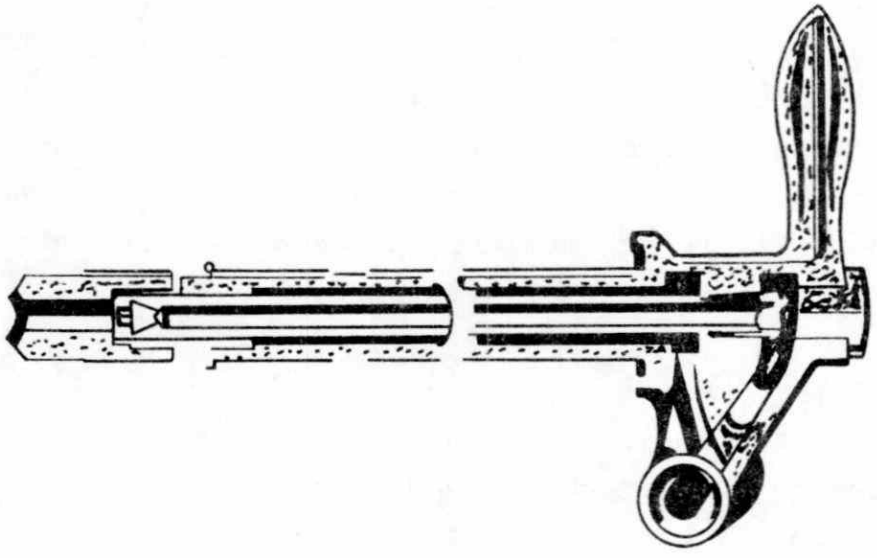

Figure 6-1 Steam-Assisted Pressure Atomizer

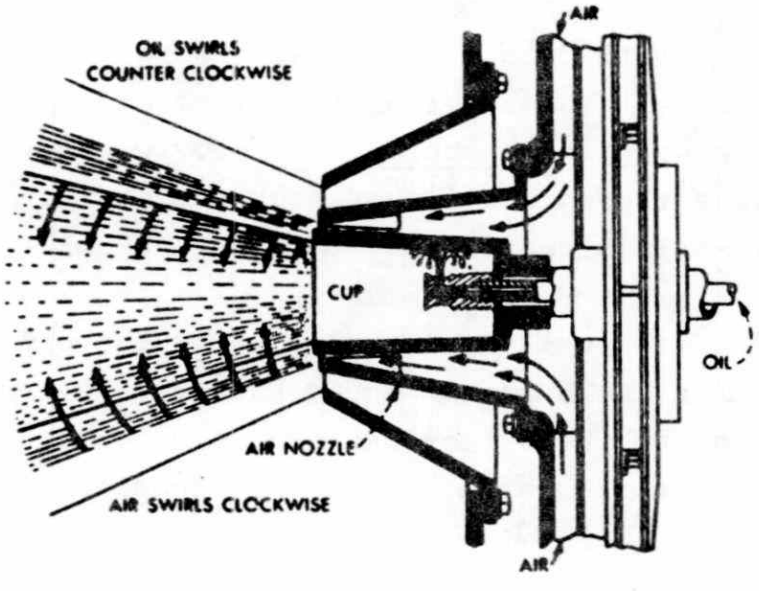

Figure 6-2 Horizontal Rotary Cup Burner

Atomizing of fuel oil can be accomplished in three ways:

1. Using steam or air under pressure to break the oil into droplets. (Figure 6-1)
2. Tearing the oil film into drops by centrifugal force. (Figure 6-2)
3. Forcing oil under pressure through a nozzle. (Figure 6-3)

All three methods are used in burners. However, in a WPCP, burners shown in Figures 6-1 and 6-2 are seldom if ever used.

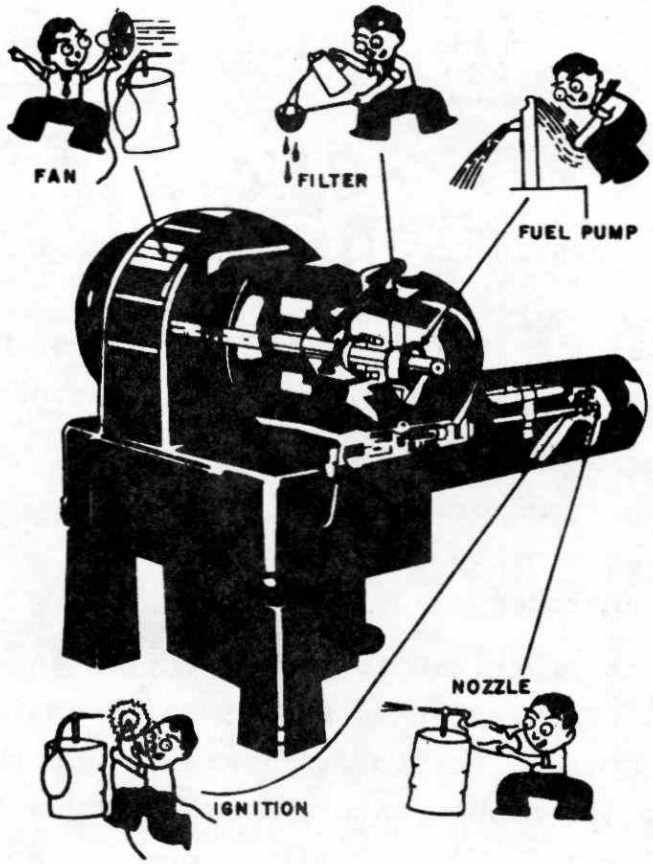

Figure 6-3 High Pressure Oil Burner

HIGH PRESSURE BURNER

A schematic diagram of a high pressure burner is shown as Figure 6-4.

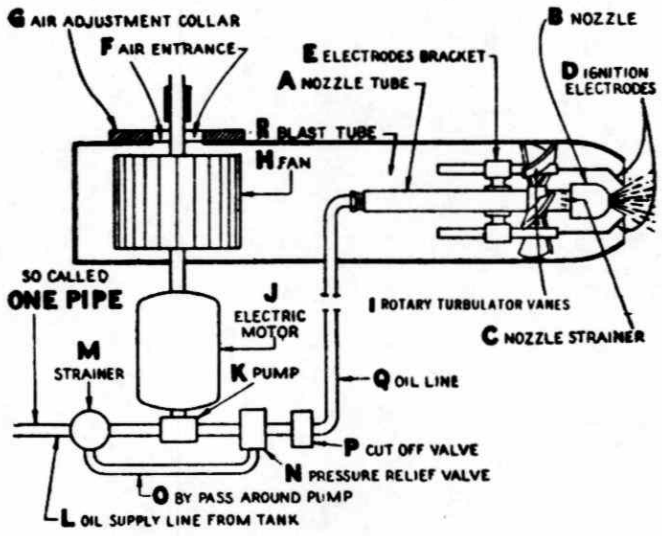

Figure 6-4 Schematic Diagram
High Pressure Oil Burner

The electrical parts of the burner which are attached to the housing and built into the unit are:

1. The electric motor
2. The transformer
3. High tension leads
4. Electrodes

The motor runs the forced draft fan and usually the oil pump. The latter is sometimes a separate unit with its own motor. Forced draft means that the air for combustion is pushed into the boiler by a fan. This is different from "induced draft", where a fan is placed in the stack and actually sucks the air for combustion through the whole boiler. This type of fan is not too often used because it is much larger than a "forced draft" fan and uses more power.

The ignition transformer supplies high voltage for ignition. It draws either one of 110/220 V and delivers 10,000 volts. The high tension leads fulfill the same function as the ignition or spark plug wires in a car. It leads the high current to the electrode.

The electrodes fulfill the same function as a spark plug, namely providing the spark for ignition, and the setting is very important for proper ignition. A rule of thumb for electrode setting is 1/8 inch gap and 3/16 to 1/4 inch ahead of the nozzle and about 5/16 to 3/8 inch above the centre of the nozzle (see Figure 6-5). The electrodes should not be touched by the oil spray, but should be above 1/32 inch away from it. Always follow the manufacturer's instructions on exact measurements for electrode setting.

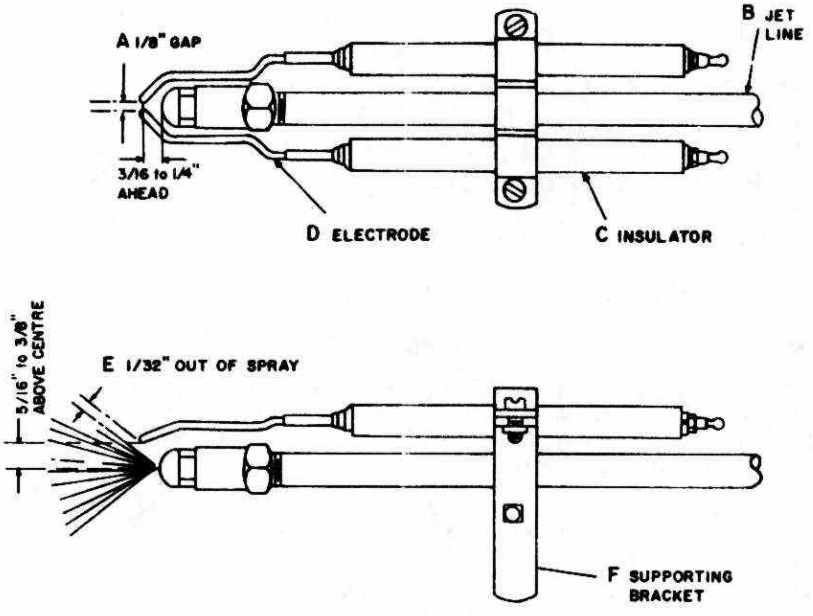

Figure 6-5
Electrode Setting

The "forced draft" fan (H) delivers the air for combustion through the blast tube (R), through the turbulator (I), which gives the air a swirling motion, to the front of the burner. The air is drawn into the back end of the burner through adjustable air shutters (G). The fuel pump (K) brings the oil up from the tank and pushes it through the delivery tube (A) to the nozzle (B).

The pump delivers the oil under a high pressure, of between 150 - 200 P.S.I. An internal or external bypass (N, 0) arrangement brings the nozzle pressure back to 100 P.S.I. All nozzles are rated for this pressure.

AIR NOZZLES

A nozzle is a finely machined piece of equipment in itself, and should always be treated with the utmost care. Never use any coarse materials such as wire brushes or steel wool to clean any internal or external parts. If this seems necessary, discard it and buy a new one. Even the smallest minute scratches in the oil passages can throw out the spray pattern and result in a poor fire.

The nozzle has six (6) main parts. See Figure 6-6

1. Nozzle tip (E)
2. Distributor (B)
3. Screw pin (F)
4. Strainer body (G)
5. Strainer screen (C)
6. Adapter (H)

Oil delivered by the pump to the nozzle enters the filter screen (C) and is forced through the slots in the distributor (B) into the swirling chamber (D). The slots give the oil a swirling motion. From here it is forced through the orifice (A) with high velocity into the combustion chamber, which it enters as a fine mist.

Just at the front of the nozzle the air is brought in contact with the oil and this air has also a swirling motion in opposite direction of the oil. The result is a thoroughly mixed mixture of air and oil which will easily ignite the moment that the spark is applied.

The chamber on the orifice denotes the spray angle of the nozzle which may be anywhere from 30° to 90°. The diameter of the orifice itself determines the size of the nozzle.

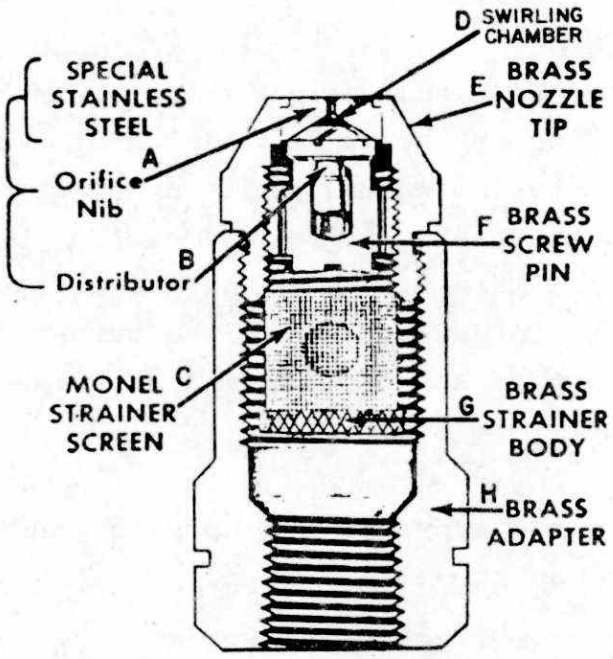

Figure 6-6 HIGH PRESSURE GUN FUEL NOZZLE

All nozzles are rated in U.S. gallons per hour. When you see 5.00 - 30° stamped on the side of the nozzle it means the nozzle is rated at 5 U.S. gallons per hour and has a spray angle of 30° at 100 P.S.I. Always use the size of the nozzle specified for your particular boiler. If you use a smaller size you will not be able to get the maximum heat out of your boiler. If you use a larger size, there is danger that sufficient air will not be available for combustion, and improper firing will result. There is some flexibility in the oil pressure, if just a little more heat is required. The oil pressure may be boosted to 125 P.S.I. which will give more oil, but do not go below 100 P.S.I. because this results in poor mixing with the air.

To clean a nozzle, soak it in a solvent such as Varsol or another of the types commercially sold. If you feel it needs further cleaning in the small passages use a wooden toothpick. Sometimes new nozzles have dried oil in the passages which alter the pattern; clean them in the above manner.

GAS BURNERS

A gas burner is a relatively simple burner. It is usually a hollow ring or bar with a series of small holes. The gas is applied to the burner under a pressure varying from 2" water column to 40" water column. The burner is connected to the gas main line and the gas escapes through the holes. Usually in WPCP boilers, the burner is set right in the air stream and the gas and air mixes to form the proper combustible mixture.

There are three types of gas burners and they are classified by the way the air is supplied.

1. Atmospheric or Domestic Burners
2. Forced Draft Burners Figure 6-7
3. Induced Draft Burners

With any burner however, both air and gas should be separately adjustable for proper mixture regulation.

Atmospheric Burner

This type of burner is mostly found in domestic applications, such as hot water heaters, hot air furnaces, gas stoves, etc. The flow of gas sucks in air through an adjustable orifice and forms the combustible mixture inside the burner. This mixture escapes through the little holes and burns right above the burner.

Forced Draft Burner

This type of burner Figure 6-7 is mounted in the air stream. The air is supplied by an external fan much the same as in the oil burner. The gas and air are therefore mixed outside the burner and burn in the combustion chamber.

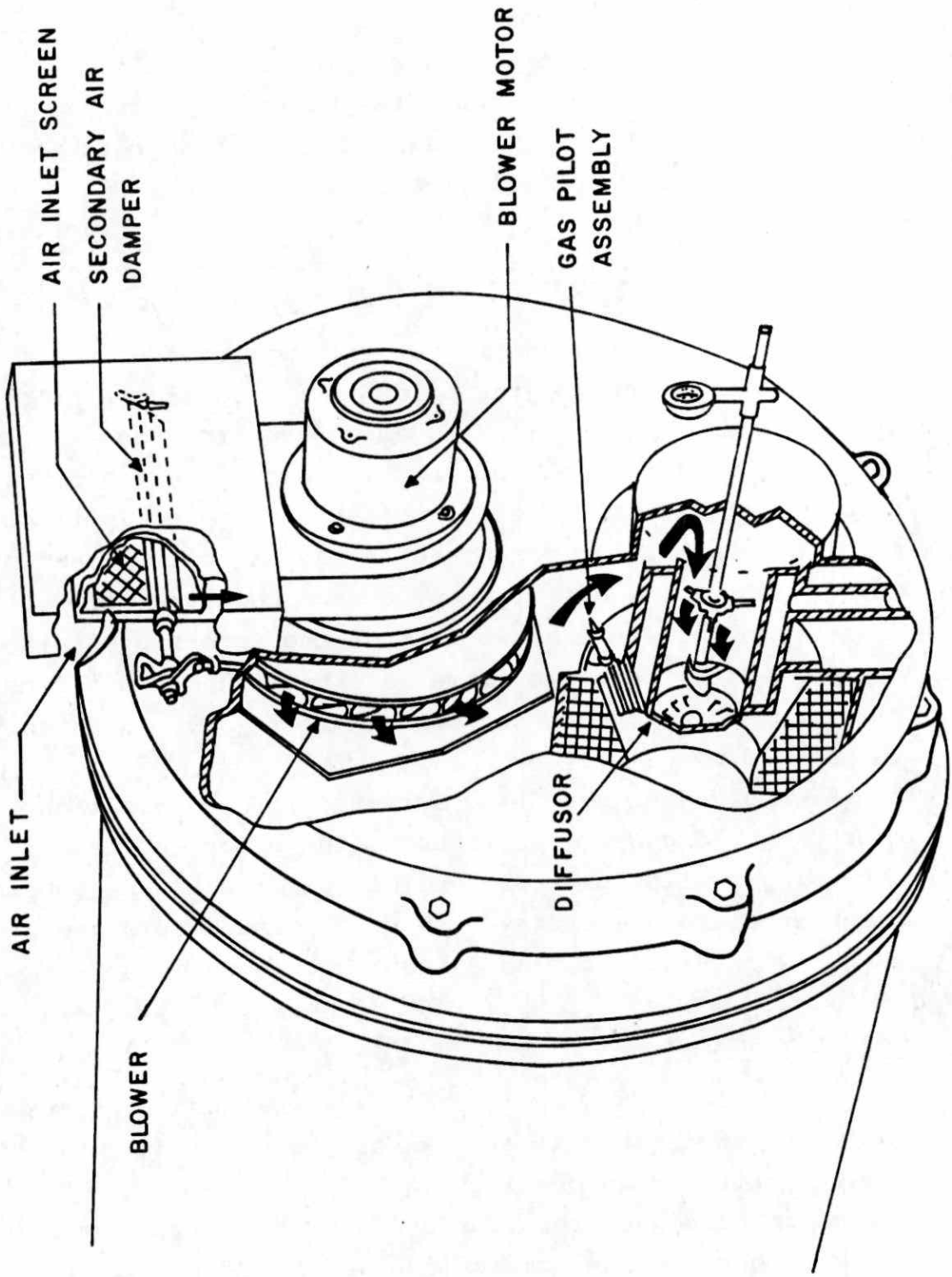

Figure 6-7 FORCED DRAFT BURNER

Induced Draft Burners

The burner is mounted in the air stream the same as with the forced draft burner. The only difference is that the air is drawn through the boiler by a fan mounted in the stack. The air is drawn in through adjustable openings in front of the boiler.

COMMERCIAL AND INDUSTRIAL PILOTS

In commercial and industrial applications where natural gas is burned, the pilot is a natural gas pilot. This is a small line with its own valve train taken from the main gas line ahead of the main gas valve train. This pilot is ignited by an electric spark from an electrode much the same as was discussed in the oil burner section. This pilot may be an interrupted or a constant pilot. The difference between the two is that the interrupted pilot goes out after the main flame is established and a constant pilot burns as long as the main flame is on. It is only turned off manually.

A digester gas fired burners, if a combination natural gas-digester gas is used, the pilot may be a natural gas pilot or a propane gas pilot. If the combination is oil/digester gas, the pilot must be propane gas, which is obtained from an external source.

GAS VALVE TRAIN

Regulations now require a somewhat sophisticated gas valve train as a safety measure to protect against the hazards involved in burning a gas fuel. Figure 6-8 is a schematic of a gas train for a boiler burning natural and digester gas. Other combinations of fuels for different applications will vary.

FIG. 6 - 8

SIMPLE SCHEMATIC FOR A DUAL GAS VALVE TRAIN

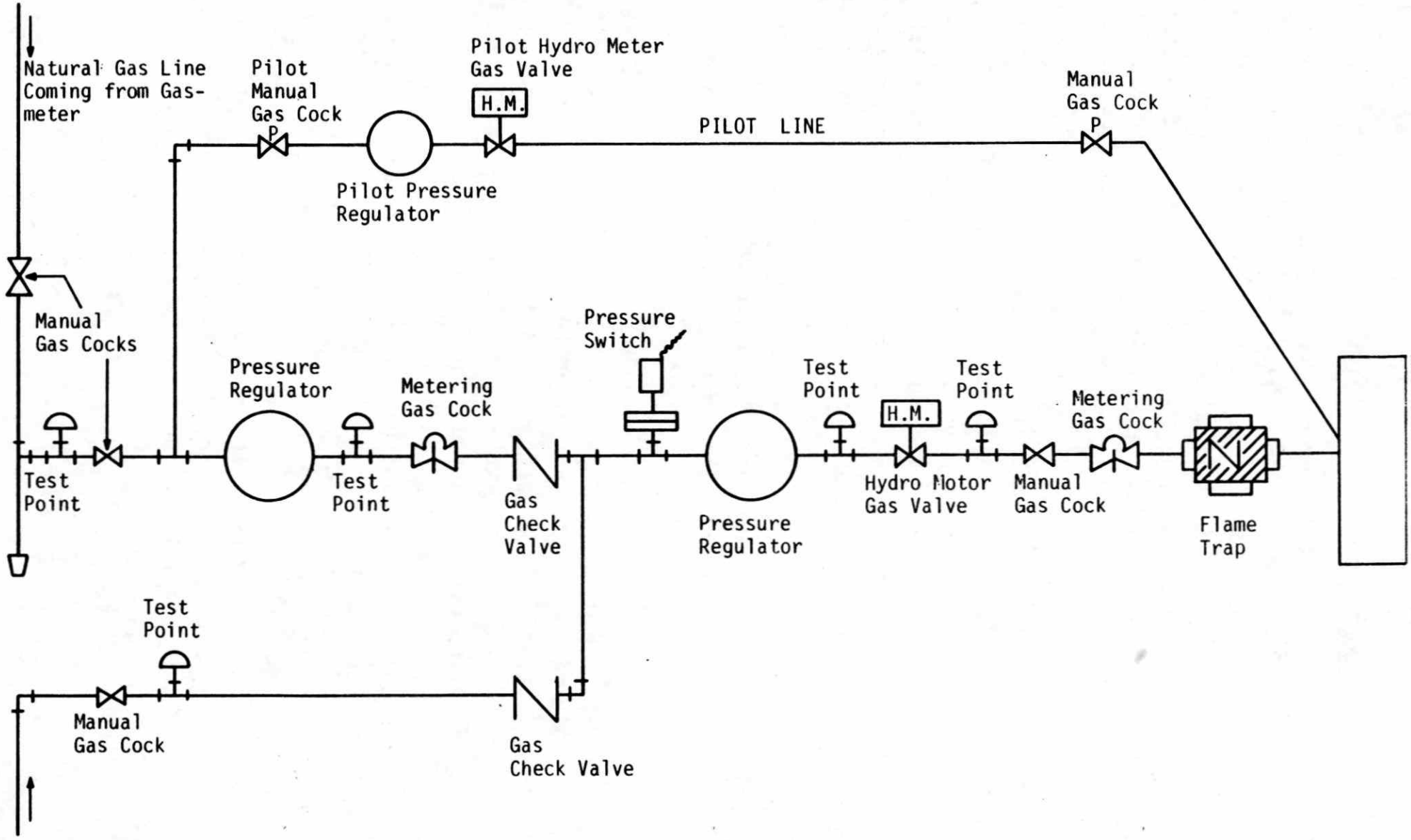

BURNER CONTROLS

There are different types of control relays on the market but basically they all perform the same function. They program the complete cycle through which the electrical cycle of the boiler has to go through, and if for any reasons a safety device such as low water cut off or flame failure device should operate, this control relay will drop out. Fig. 6-9 shows what happens during the operating cycle of the protector relay.

When the boiler calls for heat, the programming timer motor is energized, starting at the same time as the burner fan. After a pre purge period of 25 seconds the ignition will start; 5 seconds later the gas pilot will open only if spark ignition is established. 15 seconds after the pilot valve opens, ignition is shut off, pilot flame stays on and main gas valve opens. With flame established this valve stays open until heat is no longer required. At this time the timer starts up again for a 15 second post purge period after which all circuits open and the fan stops.

FLAME FAILURE

Each boiler must have a flame failure device. This can be the flame rod type whereby the flame envelops a metal rod. The action of the flame sets up a mini-current in this rod which is wired into the circuit and keeps the circuit closed. The moment the flame fails the mini-current is broken. Within 3 seconds (oil) or 5 seconds (gas) the electrical circuit opens, shutting down the burner.

An ultra violet scanner is another type of flame failure device. This is an electronic eye which sees the ultra violet rays of the flame, again this causes a mini-current to flow into the circuit keeping the circuit closed and on flame failure shutting the burner down.

FIG. 6 - 9

FIREYE PROGRAMMING SEQUENCE WITH INTERRUPTED SPARK IGNITION

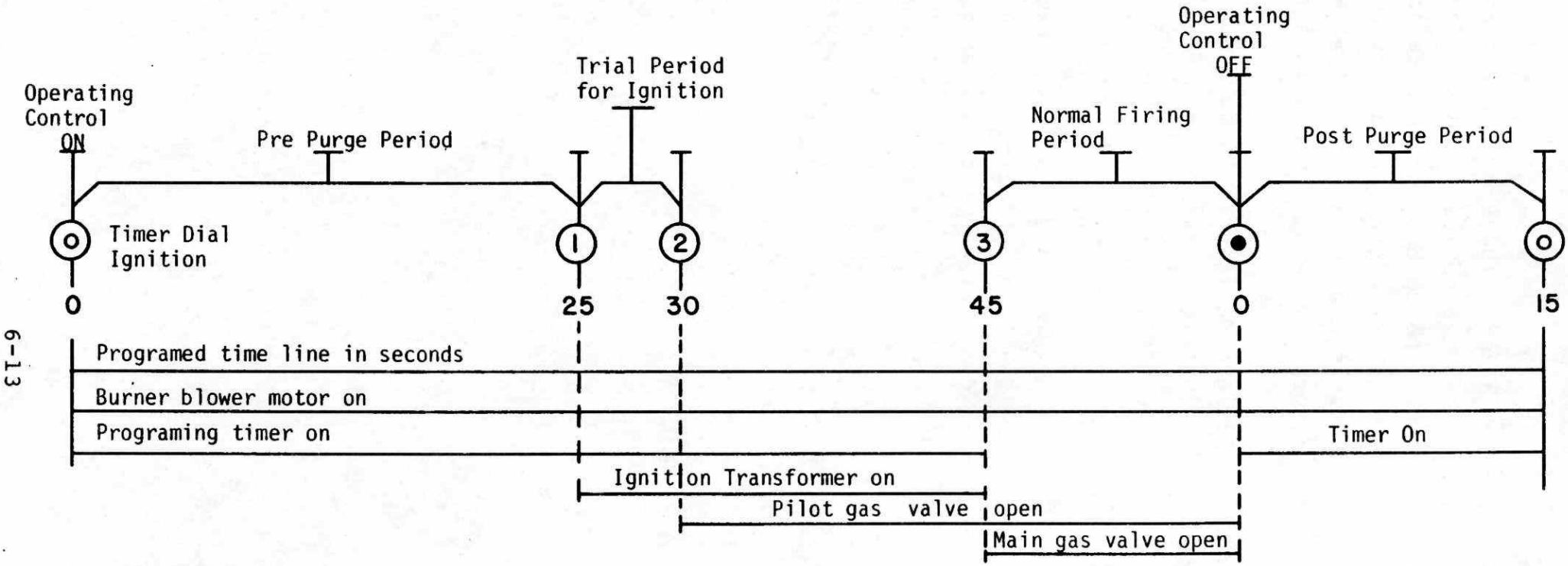

The device is a safety device. If for any reason the flame failed and such a device was not in use, oil or gas could pour into the combustion chamber and be accidently ignited by a hot spark off the brickwork. This could cause an explosion and result in extensive damage to the boiler. The flame failure device prevents this.

The flame failure device should be checked monthly by simulating flame failure. Shut off the fuel supply and check to see if the burner shuts down within 3 seconds (oil) or 5 seconds (gas).

Attached as Appendices A and B are Extracts from CSA Std. B139-1971 Installation Code for all Burning Equipment (Controls) and Combustion Safety Control Timing.

APPENDIX A

EXTRACTS

CSA STANDARD B139-1971

INSTALLATION CODE

FOR

OIL BURNING EQUIPMENT (CONTROLS)

EXTRACTS

CSA STANDARD B139-1971

Installation Code For Oil Burning Equipment(Controls)

9.6 Controls

9.6.1 Primary Safety Controls

9.6.1.1 The burner shall be equipped with a primary safety control of a type suitable for use with the burner unless otherwise permitted in writing by the authority having jurisdiction.

9.6.1.2 The primary safety control shall be installed in accordance with the manufacturer's instructions with particular regard to voltages and ambient temperatures.

9.6.1.3 When the primary safety control is of the type defined as a combustion safety control, the control shall function upon ignition failure or flame failure, within the applicable time period prescribed in Clauses 9.6.1.4 to 9.6.1.11 inclusive, to shut off the burner.

9.6.1.4 The combustion safety control shall function to actuate or de-energize the shut-off device within applicable time periods specified in CSA Standard B140.2.1, Oil Burners; Atomizing-Type. Note: See Appendix C1 for Table.

9.6.1.5 A plus factory tolerance on the nominal timings specified in Table C1 shall be allowed as follows:

(a) For nominal timings of 15 seconds or more; 10 per cent of the nominal timing;

(b) For nominal timings of less than 15 seconds; 1 second.

9.6.1.6 For a burner equipped to fire at a single fixed rate the main flame establishing period shall be based on the maximum input for which the burner is approved.

9.6.1.7 For a multi-rate or modulating burner equipped to start on low fire only, the main flame establishing period shall be based on the low fire input to the burner that is to be initially ignited, provided that this input cannot be increased until ignition at this low fire input is established and proved.

9.6.1.8 When the maximum input for main flame establishing period is over 20 gallons per hour(U.S.),a proved igniter or pilot shall be provided.

9.6.1.9 When a proved igniter or pilot is used the pilot flame or ignition establishing period shall be not more than 15 seconds. At the end of the main flame establishing period supervision of the main flame only shall begin.

9.6.1.10 The input for determining the flame failure reaction time shall be the maximum input to the main burner.

9.6.1.11 When intermittent ignition is employed, or if the ignition system is re-energized in 0.8 second or less after flame extinguishment, the maximum flame failure reaction time shall be:

(a) Where the maximum input to the burner is over 3 and up to 7 gallons per hour(U.S.)- 45 seconds;

(b) Where the maximum input to the burner is over 7 and up to 20 gallons per hour(U.S.)- 15 seconds.

9.6.1.12 Where the maximum input for main flame establishing is 20 gallons per hour(U.S.) or less and where the burner is equipped with a proved igniter or pilot, the maximum main flame establishing period shall be 60 seconds.

9.6.1.13 Combustion safety controls, when installed in the flue pipe, shall be supported independently of the flue pipe by a No. 6 Jack Chain or the equivalent.

9.6.1.14 When the oil burner is not equipped to provide safe automatic restarting after shut-down, any control which functions to shut off the burner, shall require manual resetting at a location within sight of the appliance protected.

9.6.2 Limit Controls

9.6.2.1 Limit controls shall be fitted on each installation to prevent unsafe operation in case of failure of the operating control or under abnormal conditions.

9.6.2.2 A limit control shall be installed on the appliance to prevent the following limits, when applicable, from being exceeded:

(a) Low pressure steam boiler; 15 psi;

(b) High pressure steam or hot water boiler; pressure or temperature as applicable; not more than the maximum allowable working pressure for the boiler;

(c) Low pressure hot water boiler:

(i) Open system; 200F at outlet;

(ii) Closed system; 250F at outlet;

(d) Service hot water heater; 210F at outlet;

(e) Warm air furnaces:

(i) 250F outlet air temperature for an appliance intended for installation with standard clearances;

(ii) 200F for outlet air temperature for an appliance intended for installation with clearances less than those specified as standard clearances or for installation in confined spaces (e.g.closets or alcoves);

(f) Gravity and floor furnaces; 350F at outlet.

9.6.2.3 A suitable low water cut-off control shall be fitted on each steam boiler and on each forced circulation water boiler as required by CSA Standard B51,Code for the Construction and Inspection of Boilers and Pressure Vessels.

9.6.3 Operating Control

Each burner shall be provided with at least one operating control in addition to the limit control.

Note: The operating control may be a separate thermostat or other control, and need not form part of the appliance assembly.

9.6.4 Control Circuits

9.6.4.1 A safety control shall be connected in a two-wire circuit. One side of the circuit shall be grounded and the nominal voltage rating of the circuit shall not exceed 120 volts.

Notes:

1. A safety control circuit intended to be connected directly to a (nominal) 120-volt power supply branch circuit is not to be grounded within the equipment.
2. Safety circuit means that portion of a circuit to a limit, safety pilot, or similar control (other than an operating control) such that unsafe operation of the burner or equipment may occur when the control or any part of the circuit wiring becomes grounded, open-circuited, or short-circuited.

9.6.4.2 A safety control shall interrupt the ungrounded conductors of the circuit.

9.6.4.3 A safety control circuit intended to be connected directly to a (nominal) 120-volt power supply branch circuit shall have over-current protection rated or set at not more than the value appropriate for the rating of the electrical components (including conductors) in the circuit.

9.6.4.4 Except for multiphase loads and circuits in which the load to be controlled exceeds the contact rating of the safety control*, safety controls which open an electrical circuit to the burner or to the shut-off device, shall directly open the circuit regardless

of whether the switching mechanism is integral with or remote from the sensing element.

* In these instances, the safety control may interrupt the coil circuit of a magnetic relay or contactor which in turn directly opens the circuit to the burner or to the shut-off device.

Note: The purpose of this requirement is to minimize the interposing of other controls in the safety control circuit, the failure of which might create an unsafe condition which the safety control is intended to prevent.

9.6.4.5 When it is necessary to have power to maintain a control in an operative state, the power supply to that control shall not be interrupted by a limit control or operating control other than a manually operated switch.

9.6.5 Interlocking

9.6.5.1 A burner using steam or air for atomizing the oil shall be interlocked to shut off the oil supply upon failure of the atomizing medium.

9.6.5.2 A burner installation using forced or induced draft fans or both shall be interlocked to shut off the oil supply upon failure of either fan.

9.6.5.3 Automatic burners having hinged firing-heads, which may be readily opened, shall be interlocked to prevent operation of the burner when the firing heads are not in the fully closed position.

9.6.5.4 Automatic burners requiring the preheating of the fuel oil shall be interlocked so that no oil can be delivered for combustion until the oil is at the required temperature.

INSTALLATION CODE FOR OIL BURNING EQUIPMENT

Symbol	Trouble	Disclosed by	Remedy
A	Top of Chimney Lower than Building	Observation	Extend Chimney (See Fifure 1)
B	Chimney Cap or Ventilator	Observation	Remove
C	Coping Restricts Opening	Measurement	Make Opening Equal to Inside of Chimney
D	Broken Tile Wedged in Chimney	Lowering Light or Weight Down Chimney	Break Tile with Weight on Wire or String
E	Birds Nests	Observation	Remove
F	Joists Protruding into Chimney	Lowering Light or Weight Down Chimney	Remove Projecting Portion to Clear Chimney
G	Leakage Between Loose Jointed Tile	Smoke Test with Top of Chimney Closed	Rebuild Chimney with Course of Brick between Tiles
H	Debris Accumulated in Offset	Lowering Light or Weight Down Chimney	Break Out with Rod or Weight
J	Unused Flue or Vent Connection	Observation	Remove
K	Smoke Pipe Extends into Chimney	Lowering Light or Weight into Chimney	Make End Flush with inside of Chimney
L	Offset	By Lowering Light or Weight Down Chimney	Change to Straight or Long Offset
M	Loose Fitted Smoke Pipe	Smoke Test	Close Leaks with Cement
N	Loose Fitted Cleanout Door	Smoke Test	Close Leaks with Cement
O	Opening between Flues	Smoke Test	Close Openings Permanently
P	Chimney Too Small Chimney Too Large Chimney Too Short	Measurement Measurement Measurement	Rebuild Rebuild Extend or Rebuild

Figure B1

APPENDIX B

COMBUSTION SAFETY CONTROL TIMING

COMBUSTION SAFETY CONTROL TIMING

CSA STANDARD B 139-1971

Maximum Firing Rate of Main Burner Gallons Per Hour (U.S.)	Nominal Maximum Timings Seconds	
	Main Flame Establishing Period (See Clauses 9.6.1.5 and 9.6.1.6)	Flame Failure Reaction Time (See Clause 9.6.1.10)
3 and less	90	90
Over 3 and up to 7	45 60 (See Clause 9.6.1.12)	3 45 (See Clause 9.6.1.11)
Over 7 and up to 20	15 60 (See Clause 9.6.1.12)	3 15 (See Clause 9.6.1.11)
Over 20	60 (See Clause 9.6.1.8)	3

SUBJECT:

DIGESTER GAS DISTRIBUTION

TOPIC: 7

Safety

OBJECTIVES:

The trainee will be able to:-

1. List the hazardous areas associated with digester gas production and distribution
2. Recall the requirements for venting and air circulation in hazardous areas
3. Carry out a test for combustible gases using a combustible gas analyzer
4. List the basic rules for entry into a confined space
5. Carry out or describe the safety procedure to be followed when repairing
   a. Equipment on the digester
   b. Mechanical mixers
6. Recall the safety requirements for welding and for electrical apparatus and equipment.

SAFETY

GENERAL

The digester and digester gas distribution system are potentially among the most dangerous areas in a wastewater treatment plant. Those working in these areas must be thorughly familiar with the potential hazards, the safety devices that should be used, the precautions to take and the general rules for working safely. A good inspection and maintenance program in the digester(s), the gas system and safety devices in the distribution system combined with personal hygiene, safety equipment and application of safe working procedures will significantly reduce, if not eliminate, the likelihood of dangerous conditions developing.

Each job will have special probelms which require thinking ahead about safety of individuals and equipment used on the job. Necessary safety consideration must also be included with the list of materials, equipment and procedures which are developed for the job.

Employers and employees must be knowledgeable of the requirements of the Occupational Health and Safety Act, 1978 and associated Regulations.

BODY INFECTION

Workers in treatment plants are exposed to the hazards of water-borne diseases, including Typhoid Fever, Amoebic Dysentery, Infectious Jaundice and other intestinal infections. Tetanus and skin infections must also be guarded against.

A majority of infections reach the body by way of the mouth, nose, eyes and ears. Therefore, washing your hands is a must before eating or smoking. Wear protection gloves where possible.

Soap preparations requiring no water rinse are available for field use. The common drinking cup should be banned, each man should have and use his own.

Typhoid and Tetanus innoculations are recommended. These may be obtained free of charge from local Health Authority.

This hazard to plant personnel although very real and ever present can be largely reduced by the individual himself by following a few basic rules of personal hygiene. A few of these self applied rules are attached as Appendix A.

PHYSICAL INJURIES - First Aid

Except for minor injuries, wounds should be treated by a doctor and reported for possible Workman's Compensation. Service truck and plant personnel should receive first aid instruction. See Appendix B.

It is a "Compensation Board" regulation that any plant having five (5) or more people working as a group on any shift, one of them is required to hold a valid First Aid Certificate. Remember, no cut or scratch is too minor to receive attention.

GENERAL PLANT SAFETY

The following are NO SMOKING areas in a WPCP:-

1. Influent buildings
2. Detritor rooms
3. Wet and dry wells of plant pumping stations
4. Pump rooms containing raw sludge pumps
5. Tunnels having pipe galleries carrying digester or natural gas pipe
6. Digester, digester control buildings
7. Sewers, manholes
8. Sludge holding tanks (covered)
9. Near sludge thickening tanks while mixing with compressed air is underway.
10. Sludge conditioning tanks in filter rooms
11. Sludge loading pipes to trucks
12. Sludge discharge pipes to drying beds
13. Chemical rooms

Some Protective Safety Equipment

The need for protective safety equipment in an accident prevention program has proven its value many times;

the program cannot be successful if any phase of accident prevention is overlooked.

Use safety equipment as it was meant to be used. This should be compulsory during the performance of hazardous jobs.

Protect eyes and face when there is any possibility of injuries from hand tools, power tools, welding equipment, etc.

Protect feet with safety shoes to safeguard against injuries while breaking pavements, tamping trenches, handling materials, etc.

Protect head (with hard hats) to prevent serious injuries in construction, excavation or electrical work.

Protect hands (with gloves) to prevent injuries from occurring when handling materials, sharp objects, chemicals or electrical equipment.

Use air packs when hazards such as chlorine, painting or dusty areas exist.

Prevent accidents due to falls by using safety belts, scaffolds, etc.

When working at the plant, observe the following common sense rules:

Keep walkways clear of loose objects such as pails, shovels, loose rope, etc.

Wipe up grease and oil *immediately;* salt or sand icy walks.

Pick up all tools, clean them and return them to their storage area.

When it is necessary to use tools in an empty tank or manhole, etc., lower them in a pail on a rope and remove them in the same way. Brooms and shovels can also be transported by rope. *Do not attempt to climb up and down ladders with your hands full of tools.*

Do not overload yourself when using stairways. Keep your load small enough to be able to see over it. Always keep one hand free to use the hand-rail.

Do not try to climb up or down a ladder or over a railing when handling a hose under pressure.

Always wear rubber or plastic coated, waterproof gloves when cleaning pumps, handling hoses, removing grit or sludge, etc.

When it is necessary to use an extension ladder *always lash the ladder to a hand-rail.*

Always wear hard hats when working below ground level (in tanks, manholes, etc.) or under scaffolding.

Do not hang clothes on electrical disconnect handles, light switches or control panel knobs.

Always wear a safety belt with a short rope and a safety snap when leaning out through the railings over any tank (or cleaning out spray nozzles, etc.)

Be very careful during repair work on fuel systems of gasoline engines. *Close the shutoff valve* from the tank and *be sure there is adequate ventilation* while draining the fuel system.

Tools and Machines

Use protective equipment when operating power equipment if there is any chance of flying objects or other injuries. Inspect all tools and equipment for safe operation. Necessary repairs or replacements should be made immediately. *Repair power tools and machinery only when the equipment is turned off.*

Hand Tools

Hand tools are the cause of many accidents and injuries when improperly used and in unsafe condition. Therefore, use the right tool for the right job in the right way. Use protective safety equipment where there is a job hazard. Keep the work area clear of hazards, with plenty of working space for solid footing. Tools should be in good condition and used for the purpose for which they were intended.

Portable and Power Tools

All equipment should be grounded. Check wiring and equipment regularly for defects. Be very careful when using equipment in wet areas. Use protective safety equipment when operating grinders, buffers, or other tools when there is danger of flying material.

Welding

Use the proper protective equipment at all times. Check for fire hazards before cutting or welding in areas of inflammable or explosive mixtures. *Only authorized personnel should operate welding equipment. The Ministry of Labour requires* that a 2 3/4 lb fire extinguisher be available.

Ladders

Ladders should be inspected periodically and maintained in good order. *Use safety belts* when awkward positions are necessary for the work. *Do not use metal ladders for electrical work.*

Lifting

Always lift with the leg muscles instead of the back and be sure your footing is secure. Bend you knees and keep your back straigth. Don't turn or twist your body when lifting. Get help if the load is too heavy or awkward to handle. Use mechanical devices for lifting whenever possible.

Equipment Servicing

When servicing plant and equipment: -

1. Check the ventilation of any enclosed or underground areas when gasoline operated pumps are to be used. Do not enter any crawl space under flooring for any purpose until the area has been ventilated. Asecond man should be present.
2. Do not grease or oil or attempt to service any machinery while it is in operation. Pumps on automatic control must be locked out and key carried by the operator during servicing.
3. Do not make any adjustments to operating machinery while alone. If it is necessary to run the unit to adjust it, a second man must be present and be beside the stop and go switch.
4. Do not service pumps and shafts in the dry wells of pumping stations, and in plants where the pumps and shafts are less than three feet apart without shutting off all pumps and locking them out.
5. Do not Under any circumstances, attempt to grease service pump shafting while standing on beams, piping, loose planks, guard rails, or by leaning out, over or through guard rails. If a ladder must be used, then a second man must be present to hold the ladder steady and to provide any other assistance.

PRECAUTIONS FOR ELECTRICAL MAINTENANCE

1. Plan safety into each job. Do not work around electrical panels, disconnects or switches alone.
2. Each employee shall be qualified both in experience and general knowledge to perform the particular electrical work which he is assigned, if not, an outside contractor should be called in.

3. Study the job carefully to determine all of the hazards present and to see that all necessary safeguards and safety devices are provided for safe working conditions.

4. Examine all safety devices before they are used to ensure that they are in good condition.

5. In all cases where work is being performed on or close to live conductors or equipment, at least two men shall work together. When it is necessary for one to leave, the other workman shall not continue the work until the first man returns.

6. Consider the results of each action. There is no reason for you to take chances that will endanger yourself and others.

7. Satisfy yourself you are working under safe conditions. The care exercised by others can not be relied upon.

8. Wear close fitting clothing, keep sleeves rolled down, avoid wearing unnecessary articles while working on or close to live circuits or apparatus.

9. Use only approved types of rubber or leather gloves.

10. Protect yourself by placing an insulated medium between you and ground or grounded apparatus to keep any part of your body from providing a path for electrical current when working on conductors or apparatus that may be energized.

11. Use rubber mats when working on any electrical control panel or switch and disconnect boxes.

12. Open and close switches completely with a firm positive motion. Switches in a partly open postion may arc or cause a flash-over with damaging results to the switch and possible injuries to the operator.

13. Open switches fully before removing fuses. To remove a fuse from a circuit carrying a current without opening the switch is particularly hazardous. Use an approved low-voltage fuse puller to remove fuses on a circuit of less than 500 volts (where no switch is provided) whether a disconnect is provided or not. Remove fuses by breaking contact with the hot side of the circuit first. Use the reverse procedure when replacing fuses. Insert the fuse in the cold terminal first.

14. Do not stand directly in front of panel to remove fuses or shut off disconnects.

15. Shut off the power when examining or making repairs or alterations on light and power circuits. When this is impractical Head Office must be contacted for further instructions before proceeding with the work.

16. Consider all electrical circuits to be dangerous. Treat dead circuits as though they were alive. This may prevent an accident as the circuit may be closed through an error of some other person.

17. Exercise extreme care when required to locate troubles on a series lamp circuit, before repairs are made make sure the power is cut off.

18. Lock or block open the control devices, open disconnect switches or remove fuses before examining, repairing or working on power circuits. After these precautions have been taken, attach tie-up tags worded "WORKMEN ARE WORKING ON LINE." The tag shall bear the name of the workman. Tie-up tags shall remain on the opened devices until removed by the workman whose name appears on the tag. If the workman leaves without removing his tag, it may be removed only on authorization of Head Office.

19. Before working on line circuits at a point remote from the control switch, which has been tagged, it is recommended that the conductors be grounded at a point on the line between the switch and the work station.

20. Make a complete check of the circuit before applying power for the first time. This is to be done by a qualified man in charge of the repairs, all other workmen to stand off at a safe distance.

FIRE PROTECTION

Each operator should have first hand knowledge of fire extinguisher, its ABC rating point of contact and time of operation.

A CO_2 fire extinguisher can only be used in an open area where the chance of using up the local oxygen is minimal. Never grab the horn of the extinguisher to direct the CO_2. The gas being expelled will freeze your hand to the horn causing serious injury. There is a handle provided. Do not direct the CO_2 at anyone. To fight the fire you must approach the fire from upwind, pull the pin and aim directly on the burning area.

The approximate operating time for CO_2 fire extinguishers is as follows:

2½ lb. 10 sec. ± 2 sec. 2. BC.
5 lb. 14 sec. ± 2 sec. 4. BC.
10 lb. 14 sec. ± 3 sec. 6. BC.
15 lb. 25 sec. ± 4 sec. 8. BC.
20 lb. 30 sec. ± 4 sec. 8. BC.

Note: The 2. BC etc., refers to the type of fires and area the extinguisher covers. (BC) indicates electrical, gas, oil type fires, "A" type are wood, paper, etc., CO_2 will not be effective on "A" type fires.

(2) indicates the extinguisher will put out a fire of not more than 2 square feet in area.

Weight indicated refers to contents only.

A Dry Chemical extinguisher can be used in any area. Approach from upwind and pull the pin, you do not have to stand as close to the fire as with CO_2. Dry Chemical will put a blanket of chemical over the fire, smothering it.

Note:

1. *All extinguishers must be refilled after using no matter what amount has been used.*
2. *All extinguishers must be hydrostatically tested every five years.*

DIGESTER AREA SAFETY

General

The Installation Codes for the production, storage, handling and utilization of Digester Gas, handling and utilization of Propane and Fuel Oil and utilization of Natural Gas in WPCPs, will apply to the construction of new waste water treatment plants and additions to existing plants. They will also apply to the upgrading of existing WPCPs. Included in CAN 1-B105-M81, Installation Code for Digester Gas Systems are requirements for safety procedures in carrying out maintenance of digesters and digester equipment. MOE plants are also subject to the requirements established by the Ministry and published in the Ministry Safety Policy Manual.

It cannot be over-emphasized that digester gas is potentially highly dangerous, with respect to fire and explosion. However, a healthy respect allied with common sense and compliance with safety regulations renders gas handling no more dangerous than any other plant operation. Care must be taken from the start of work that all sources of ignition are guarded against, e.g. sparks from tools, using or moving equipment, smoking, wearing shoes with metal clips on heels, and leather soled shoes that are

worn sufficiently to expose the shoe nails. Non-sparking tools should be used when possible.

Hazardous Areas

Hazardous areas are those locations where flammable vapours are gases or combustible atmospheres are likely to be present. Regulations require that they be designed and located so as to prevent all possible sources of ignition. They include digester control rooms and buildings containing:

1. Dehydration, scrubbing gas, metering and regulating equipment.
2. Gas sampling sinks
3. Gas supply water accumulators and drip traps
4. Gas pump units
5. Gas pressure recording meters.

Adequately vented boiler rooms are excluded.

All electrical apparatus and equipment installed in these locations must be of explosion proof design. Combustible gas detection equipment is required and must automatically activate emergency ventilation systems and trigger audible alarms and readily visible lights at a preset value, 20% of the LEL of combustible gas. Detectors must be tested using 2% natural gas and calibrated at least once each month.

Mechanical air circulation of outside air through the location must be continuous. The air changes must be numerous enough to dilute and expel leaking gas at below the LEL. In any case there must be at least 5 air changes per hour. Emergency mechanical forced ventilation must also be provided to permit at least 10 air changes per hour. A switch controlling the emergency ventilation system must be provided at a convenient location just outside the door to the rooms and buildings. "DANGER, NO SMOKING OR OPEN FLAME" signs must be posted at:

1. The Entrances to a digester control room and building

2. Entrance to a gas compressor room
3. Ladders and stairways leading to a digester roof
4. The pressure/vacuum relief valve(s) on a digester roof.

ENTRY INTO CONFINED SPACES

By regulation, the digester is defined as a confined space. When entry into the digester is required observe the following basic rules: -

1. No person shall enter a confined space until the tester has confirmed the space safe for entry.

2. When the person or persons in the confined space are likely to stay longer in the confined space than is normally required for an inspection, a portable ventilation unit must be utilized.
The ventilation unit shall be in continuous operation as long as the space is occupied.

3. All persons while working in a confined space shall wear a parachute type safety harness.

4. At least two persons shall be at the entrance manhole to handle the safety rope or one person and a manhoist and safety cable.

5. No confined space shall be entered by a person while alone.

6. A confined space where the tester records more than 0% of the L.E.L. of explosive gases or the concentration of oxygen is less than 18% or more than 23%, more than 0% H2S, or when the conditions in the confined space changes from a negative reading of the L.E.L. or below 18% or above 23% of oxygen the persons entering the space shall wear suitable self contained breathing equipment, parachute type safety harness. NOTE: All equipment to be calibrated by qualified personnel.

7. Entrance to a confined space under the above conditions shall be only for emergency reasons and the persons must leave the space as soon as possible.

DIGESTER CLEANOUT

1. Safety Equipment Required

   a. Oxygen meter O-25% range.
   b. Combustible gas anlayzer 0-1.0 L.E.L. range.
   c. Portable ventilation providing 30 air changes per hour having a class "I" group "D" explosion proof meter.
   d. Parachute type safety harness, one for each person entering the tank.
   e. 40-foot aluminum extension ladder.
   f. Self contained breathing equipment.
   g. Portable flood lights.
   h. Overalls, rubber boots (hip size) hard hats, rubber or plastic coated cotten gloves.

2. Ventilation

   a. The ventilation fan shall be located on one of the roof manholes and positioned so that the fan is exhausting the air and any gases in the digester to atmosphere.

   b. The ventilation fan shall be in continuous operation twenty four hours per day from the first entrance of persons until the cleanout is completed.

   c. The opening of the bulkhead door as soon as possible is required to allow outside air to circulate through the digester from bottom up through the roof.

3. Procedure

   a. No person shall enter the digester until the competent person has confirmed that the digester is safe for entry.

   b. No person shall enter a digester while alone and without safety equipment.

   c. All persons working in a digester will wear the protective clothing and equipment provided.

   d. At least (2) two persons are required in the vicinity of the entrance manhole on the roof to assist in the removal of a person overcome or injured while in the digester.

   e. The bulkhead door should be used as soon as possible for safer entrance and egress.

Testing after Cleanout

Working digesters having been emptied for cleanout or repair, shall be subjected to the same leak test procedures as a new digester and as described below before returning to service. The tests shall be witnessed by and proven acceptable to the enforcing authority.

1. Vacuum Test (Steel Roofs)

   All joints, welds, connections, seals, etc., and any other area of possible gas leakage shall where practicable be tested to a partial vacuum of not less than 14 kPa negative pressure for a duration of not less than the time necessary for a complete examination of the area being tested, but in no case less than 60 seconds. (See Appendix C for tests).

2. Pressure Tests

   a) A newly constructed fixed type digester roof shall be tested, using air or inert gas, at an internal positive pressure of not less than 1 1/2 times the maximum operating pressure of the digester for a period of not less than:

      1. 3 hours for a steel roof.
      2. 6 horus for a concrete roof and the test is not to be conducted until after at least a 28 day curing period.
      3. 6 hours for a fibreglass roof.

   b) A new floating gas holder type digester roof shall be tested using air or inert gas at an internal positive pressure of not less than 0.75 kPa in excess of the maximum operating pressure of the digester for a period of not less than 3 hours for a steel roof and 6 hours for a fibreglass roof. See Appendix C.

   c) A new floating pontoon type digester roof shall be tested using air or inert gas at an internal pressure of not less than the maximum operating positive pressure of the digester for a period of not less than 3 hours. See Appendix C.

DIGESTER ROOF EQUIPMENT REPAIRS

When repairing equipment on the digester roof the following procedures is to be followed:

1. A few days prior to the start of the work, release the gas under the roof and lower the sludge level to at least three feet below the lip of the draft-tube of the mixer (if there is one).
2. Brief all personnel involved in this work of the hazards, the safety equipment required and the precuations to be taken.
3. Have at the plant site all equipment required for the work.
4. All electrical controls to the equipment to be removed or serviced, must be disconnected, tagged and locked out, the key being kept by the Chief Operator.
5. During the actual disconnection and removal of the equipment from the roof, explosion meter tests must be recorded at the open manholes.
6. When replacing and connecting the equipment on the roof, explosion meter readings are to be recorded.
7. The use of a hoisting crane and operator to remove and replace equipment on the roof of the digester is covered by Occupational Health and Safety Act, 1978 and Regulations.

Mechanical Mixer

To provide an adequate safety factor and reduce the digester gas being produced to below the lower explosive limits (LEL) the following procedure must be followed.

1. Stop all raw sludge pumping to the digester two days before work is started.

2. a. Stop the operation of the mixing units one day before work is started.

   b. Isolate the digester from all sources of gas.

   c. Release the stored gas under the roof slowly to atmosphere through the roof P.R.V., leave valve open.

3. Open all manhole covers located on the roof.

   When the manhole covers are opened the digester gas still contained under the roof will vent to atmosphere through the open manholes. The gas will be seen as a vapour which is highly explosive. The length of time it takes to dissipate depends on the digester size.

   All personnel must leave the roof area until this vapour has dissipated, except the individual(s) operating the gas analyzer.
   An extraction fan 18" in diameter having a Group 1, Class D, explosion proof motor and a CFM OF 5500 output must be mounted on one of the open manholes.
   A further reading of the discharge of the fan must be taken. A reading of .2% would indicate safe working conditions on the digester roof.

4. When the mixer unit is being lifted off its base a hose from a cylinder of nitrogen or carbon dioxide must be inserted into the opening as soon as there is a sufficient room and the area around the mixer unit diluted with the inert gas.

   The nitrogen or CO_2 gas discharge is controlled by a regulator on the gas cylinder.

   While the mixing unit or units are being repaired a one inch hole could be drilled through the unit top plate and a short nipple be installed with a threaded cap. The nipple could be used to attach an inert gas pipe or hose when it is necessary to remove the mixing unit in the future.

5. a. During the period when the mixing units are being repaired, the manhole covers should be closed down on a piece of 2 X 4 lying across the opening leaving an air passage into the digester.

   b. A tarpaulin or piece of plywood placed over the opening and held down is necessary.

   c. The extraction fan left in place and in continuous operation.

6. When the mixing units are being replaced the manhole covers would be re-opened fully and a gas reading made at intervals on the discharge of the extraction fan.

   NOTE: The type of tests made, the testing unit used and by whom must be recorded in the confined space entry permit.

Waste Gas Burners

When it is necessary to light a waste gas burner by hand, certain precautions must be taken to avoid being burned when the gas is ignited. The suggested procedure is as follows:-

1. Always use an oily rag wrapped around a strong stick at least eight feet long. Do not use a hand torch or match.
2. Stand back about 10 feet from the burner, light the rag and approach the burner from a cross-wind direction, not up-wind or down-wind.
3. Thrust the burning rag on the stick at arms length into the ignition hole, or if the wind direction will not permit this, place the rag at the bottom or top of the burner pot.

The reason for not igniting the burner from down-wind is obvious, but standing up-wind, you could find yourself in a back draft or down draft. You might then be enveloped by swirling burning gas. The use of natural gas or propane gas pilot ignition removes the necessity of hand lighting and assures that all waste gases are burned at all times.

APPENDIX A

PERSONNAL HYGIENE

PERSONAL HYGIENE

For the sake of your health and the health of your family:

1. Never eat your lunch or put anything into your mouth without first washing your hands.
2. Do not smoke while working in tanks, on pumps, trucks, filters, etc. Remember, you inhale or ingest the filth that collects on the cigarette from dirty hands. Save your smoking time for lunch hours or at home.
3. Never put your hands above your collar when working on any plant equipment, if possible.
4. Don't wear your overalls or rubber boots to the dining area.
5. Always wear your rubber boots when working in tanks, around sludge, washing down, etc. Don't wear your street shoes.
6. Keep your street shoes in your locker. Remember: what your shoes pick up at the plant they will leave on the floor of your home.
7. Don't wear your coveralls or rubber boots in your car or home.
8. Have a complete change of clothing to wear when going home.
9. Always clean any equipment such as safety belts, harness, face masks, gloves, etc., after using. You or someone else may want to use it again.
10. Always wear rubber or plastic coated gloves when cleaning out pumps, handling hoses, or when working around the plant.
11. Avoid putting on gloves when your hands are dirty. Wash first.

12. Wash with plenty of water or take a shower immediately after being splashed with sludge, or any chemical. *DON'T DELAY.*

13. Don't just wash your hands before going home. Wash your face thoroughly too. There is more of your face to carry germs than there is of your hands.

14. Wear a hat when working around sludge tanks, filters, or cleaning out grit or other channels. Don't go home with your head resembling a mop that just wiped up the floor around a cleaned out pump.

15. Keep your fingernails cut short and clean - they are excellent carrying places for dirt and germs.

APPENDIX B

FIRST AID

FIRST AID

1. Remove patient from gas area. Patient should be kept in a warm room (about 21°C). Supply blankets under and over patient. Keep patient warm and quiet. Rest is essential.

2. Place patient on back. Place a folded coat, blanket, etc., under victim's shoulders so his head falls well back. This maintains a clear air passage to lungs of victim.

3. Call for medical aid immediately.

4. Promptly remove clothing contaminated with liquid chlorine, or chlorinated water. Keep patient warm with blankets.

5. A mixture of carbon dioxide and oxygen, with no more than 7% carbon dioxide, may be given. This mixture, already prepared and sold with the necessary apparatus, can be administered for periods of two minutes followed by two-minute rest periods for no longer than thirty minutes. Follow instructions of the gas apparatus supplier carefully. If carbon dioxide and oxygen mixture is not readily available, then oxygen alone may be used, or fresh air "Air Pack".

6. Milk may be given in mild cases as a relief from throat irritation.

7. If breathing seems to have stopped, immediately start "Mouth to Mouth" or "Revised Sylvester" methods of artificial respiration. *Do not exceed 17 to 18 movements per minute.* If possible, assist respiration with an inhalator or respirator. See page 6-23.

8. When eyes are irritated with chlorine, wash repeatedly with water and then with 1% boracic acid solution. Castor or olive oil drops may be used. In severe cases of eye contamination due

to chlorine, use bubbler fountain, hose, or eye cup. Irrigate for 15 minutes. A routine of 5 minutes irrigation and 10 minutes rest should then be followed for one hour. Prompt action is absolutely essential to protect eyesight.

9. Areas of the skin which have been splashed with liquid chlorine or chlorinated water should be repeatedly washed with water. After thorough washing, any burned area should be covered with a sterile dressing and bandaged snugly unless blisters are apparent; then bandage loosely.

If facilities are available, it is generally recommended that patients be removed to hospital as soon as possible, unless recovery from chlorine exposure is prompt and the exposure mild.

REVISED SYLVESTER METHOD OF ARTIFICIAL RESPIRATION

Lose no time in starting - delay can be fatal.

1. Clear mouth of any obstructions.
2. Lay casualty on his back.
3. Elevate shoulders of casualty with a folded coat, blanket, etc., so his head falls well back. This maintains a clear air passage to his lungs.
4. Place casualty's head between your knees and grasp his arms at the wrist.
5. Cross arms over the lower half of the breastbone and rocking forward, press firmly downwards (about 20 lbs. pressure), forcing air out of lungs of casualty.
6. Release the pressure by rocking back and pull his arms upwards, outwards and backwards. This extends the chest walls and draws air into the casualty's lungs.

7. Repeat cycle 12 to 15 times per minute until doctor arrives and says to stop, or until normal breathing is restored, or rigor mortis has set in.

ORAL RESUSCITATION

Lose no time in starting - delay can be fatal.

1. Clear mouth of any obstructions.
2. Lay casualty on his back.
3. Place a folded coat, blanket, etc., under victim's shoulders so his head falls well back. This maintains a clear air passage to his lungs.
4. Kneel beside casualty's head.
5. Pinch his nose and open your mouth wide and blow into his mouth strongly enough to cause the casualty's chest to rise.
6. Remove your mouth. Casualty's chest should fall.
7. Repeat cycle 12 to 15 times per minute until doctor arrives and says to stop, or normal breathing is restored, or rigor mortis has set in.

Artificial respiration must be continued until natural breathing is restored, a doctor says to stop, or rigor mortis sets in.

VACUUM TEST METHODS

a) Vacuum testing is conveniently performed by means of a metal testing box 150 mm wide by 760 mm long, with a glass window in the top. The open bottom is sealed against the roof surface by a sponge-rubber gasket. Suitable connections, valves, and gauges should be provided to effectively carry out the tests.

b) Approximately 760 mm of the seam under test is brushed with a soap suds solution or linseed oil, (in freezing weather, a non freezing solution may be necessary for outdoor testing). The vacuum box is then placed over the coated section of the seam and vacuum is applied to the box. The presence of porosity, and cracks in welded seams, leaking joints, leaking connections, etc., is indicated by bubbles or foam produced by air sucked through the welded seam or other type of joint, connection, etc.

c) A partial vacuum can be drawn on the box by any convenient method, such as connection to a gasoline or diesel motor intake manifold or to an air ejector or vacuum pump.

PRESSURE TESTS

The pressure tests shall be carried out by filling the digester tank with liquid to such a level that the entrapped air lifts the roof free of the corbels.

Additional pressure as required shall be provided by the introduction of air or inert gas to raise the roof to the upper stops to verify the structural integrity of the entire digester tank.

GLOSSARY OF TERMS

air supply -

With respect to the installation of an appliance, means combustion air, flue gas dilution air, and ventilation air.

combustion air -
Means the air required for satisfactory combustion of gas including excess air

primary air -
Means that portion of the combustion air that is supplied for the initial stages of the combustion process and is supplied upstream from the point of ignition

secondary air -
Means that portion of the combustion air that is supplied for the intermediate and final stages of the combustion process and is supplied downstream from the point of ignition

ventilation air -
Means air that is admitted to a space containing an appliance to replace air exhausted through a ventilation opening or by means of exfiltration

appliance control system -

means a combination, as applicable, of,(a) primary safety control,(b) limit controls, and (c) operating controls, that is used to control the burner of an appliance and may be:

(a) Automatic, where the burner, when started, will continue an unlimited number of operating cycles without manual attention unless shut down by the combustion safety control; or

(b) Semi-automatic,where the burner, when started, will continue an unlimited number of operating cycles without manual attention unless shut down by the combustion safety control or limit control; or

(c) Manual, where the burner, when started, will complete only one cycle of operation without manual attention

automatic operation -

Means an operation, or sequence or cycle of operations, that is performed by a device or combination of devices without manual attention

boiler -

Means an appliance intended to supply hot liquid or vapour for space heating, processing or power purposes

high pressure boiler -
Means a boiler other than a low pressure boiler

low pressure boiler -
Means:

(a) A boiler in which vapour is generated and this is intended to be operated or is operated at a vapour pressure of not more than 15 psi; or

(b) A boiler in which a liquid is heated but no vapour is generated and that is intended to be operated or is operated at a liquid pressure of not more than 160 psi and in which the liquid at the outlet does not exceed 250F.

branch line -

Means the part of a piping or tubing system which conveys gas from the main piping, tubing or header to an appliance or appliances

burner -

Means a device or group of devices forming an integral unit for the introduction of gas, with or without air or oxygen, into the combustion zone for ignition.

automatic burner -
Means a burner equipped with an automatic appliance control system

fan assisted burner -
Means a burner in which the combustion air is supplied by a fan or blower at sufficient pressure to overcome the resistance of the burner only

main burner -
Means the burner unit exclusive of the pilot burner

manual burner -
Means a burner equipped with a manual appliance control system

natural draft burner -
Means a burner which is not equipped with a mechanical device for supplying combustion air

pilot burner -
Means a burner at which the pilot is established

power burner(forced draft burner) -
Means a burner in which the combustion air is supplied by a fan or blower at sufficient pressure to overcome the resistance of the burner and the appliance

semi-automatic burner -
Means a burner equipped with a semi-automatic appliance control system.

burner unit -
Means one or more burners which can be ignited safety and simultaneously, from one source of ignition

combustion safety control system response timing -
Means the total interval of time between unintended flame extinguishment and the closure of the gas shut-off device in a combustion safety control system

cubic foot of gas -
Means the amount of gas that would occupy 1 cu ft when at a temperature of 60F saturated with water vapour, and under a pressure equivalent to 30 in of mercury

excess air -
Means air supplied to the combustion zone in excess of that which is theoretically required for complete combustion

fitting -
Means an item in a piping or tubing system that is used as a connector such as, an elbow, return bend, tee, union, bushing, coupling, cross or nipple, but not including such functioning items as a valve or regulator

flame failure response time -
Means the interval of time between unintended flame extinguishment and the de-energization of the gas shut-off device.(See also "Flame safeguard response timing").

flame-sensing device -
Means that component of a combustion safety control that senses flame

flame safeguard response timing -
Means the interval of time between the initial detection, by the flame-sensing device, of unintended flame extinguishment and the initiation by the flame safeguard of shut-off the gas supply.

ignition -

Means the establishment of a flame

intermittent ignition -
Means a source of ignition which continues to function during the entire period that the flame is present

interrupted ignition -
Means a source of ignition which ceases of function after the flame establishing period

operating control -
Means a control used to regulate or control the normal operation of an appliance

orifice -

Means the opening in a cap, plug, spud, plate, or other device through which gas is discharged and by which its flow is limited

pilot -

Means a flame which is utilized to ignite gas at the main burner or burners

continuous pilot -
Means a pilot that burns without turndown throughout the entire time the burner is in service, whether the main burner is firing or not

expanding pilot -
Means a pilot that normally burns at a low turndown throughout the entire time the burner is in service whether or not the main burner is firing, except that upon a call for heat the pilot is automatically expanded so as to reliably ignite the main burner.
NOTE: This pilot may be turned down at the end of the flame establishing period for the main burner.

Intermittent pilot -
Means a pilot which is automatically lighted each time there is a call for heat, and burns during the entire period that the main burner is firing

interrupted pilot -
Means a pilot which is automatically lighted each time there is a call for heat, and in which the pilot is cut off automatically at the end of the flame establishing period of the main burner

proved pilot -
Means a pilot flame supervised by a primary safety control which senses the presence of the pilot prior to permitting the main burner gas to be delivered for combustion

self-energized pilot -
Means the pilot used in a self-energized control system

purge -

Means to replace the existing fluid, gaseous or liquid, in the piping, tubing,equipment,or appliance with the desired fluid

safety control -

Means an automatic control of a safety control system.

safety control system -

Means a system of automatic controls that is intended to prevent automatically, unsafe operation of the controlled appliance, and may include relays, switches, and other auxiliary equipment and interconnection circuitry

limit control -

Means a safety control intended to prevent unsafe condition of temperature, pressure or liquid level

primary safety control -

Means a safety control intended to prevent abnormal discharge of gas at the burner in the event of flame failure or ignition failure

combustion safety control(flame safeguard) -

Means a primary safety control sensing the presence of flame, and causing gas to be shut off in the event of flame failure or ignition failure

self-energized control system -

Means a burner control system where part of the heat energy of the pilot is converted through a thermopile to electrical energy,sufficient to operate the control system and automatic valves

trial-for-ignition period(flame establishing period) -

Means the interval of time permitted by the flame safeguard between the initiation of the opening and the initiation of the closing of the gas shut-off device if a flame has not been detected

tubing -

Means gas conduits of circular cross section that are not of sufficient wall thickness or of suitable outside diameter to permit threading to Iron Pipe Size(IPS) Standards

flexible tubing -

Means tubing that can be easily bent without the use of special tools,does not necessarily retain its bend, and is not subject to damage if re-bent serveral times

rigid tubing -

Means tubing that normally cannot be bent without the use of special tools

valves -

firing test valve(firing valve) -
Means a manually operated, lubricated plug type, quarter-turn valve that has stops in the open and closed positions and that has an attached handle, or loose fitting key, or extended handle wrench and that is located downstream of all safety shut-off valves on the valve train and as close to the burner as is practicable

lubricated plug type valve -
Means a manually operated valve of the plug and barrel type that is

(a) provided with means for maintaining a lubricant between the bearing surfaces

(b) so designed that the lapped bearing surfaces can be lubricated and the lubricant level maintained without removing the valve from service and

(c) so constructed that the lubricant can be reservoired so as to be distributed evenly over the entire lapped bearing surfaces of the valve when the plug is rotated

safety shut-off -
Means a valve that automatically shuts off the supply of gas in response to the action of a combustion safety control or limit control.

valve train -
Means the combination of valves, controls, piping and tubing of an appliance upstream from the manifold, through which gas is supplied to the appliance and by which gas is controlled

vent -

Means that portion of a venting system designed to convey vent gases from the vent connector, or directly from the appliance when a vent connector is not used, through a vertical distance to the outdoors and includes:
Type B vent - a vent certified to ULC Standard S605-1975 and consisting entirely of factory made parts, each designed to be assembled with the other without requiring field fabrication, and intended for venting appliances certified for use with such type of vent.
Type BW vent - a vent certified to ULC Standard S605-1975 and consisting entirely of factory made parts, each designed to be assembled with the other without requiring field fabrication and intended for venting only wall furnaces certified for use with such type of vent
Type L vent - a vent certified to ULC Standard S609-1973 and consisting of factory made parts, each designed to be assembled with the other without requiring filed fabrication and for use with appliances certified for use with Type L vents.

vent gases -

Means flue gases plus flue gas dilution air

venting -

Means the removal of flue gases or vent gases to the outdoors by means of building openings or venting systems.

water column (W.C.) -

Means the measurement of the pressure of a gas by displacement of water in a "U" gauge, measured in inches

Abbreviations of words and phrases.

B&SG.....Brown and Sharpe Gauge
Btu .....British thermal unit(s)
Btuh .....British thermal unit(s) per hour
cfm .....cubic foot(feet) per minute
cng .....compressed natural gas
diam .....diameter
F .....degree(s) Fahrenheit
ft .....foot(feet)
gal .....gallon(s)
GSG .....Galvanized Sheet Gauge
hr .....hour(s)
ID .....inside diameter
in .....inch(es)
IPS .....iron pipe size
lb .....pound(s)
lng.....liquified natural gas
max.....maximum
MSG .....Manufacturers Standard Gauge
No .....number(s)
OD .....outside diameter
oz.....ounce(s)
psi .....pound(s) per square inch
psig .....pound(s) per square inch gauge
sq ft .....square foot(feet)
sq in .....square inch(es)
W.C. .....water column
wt .....weight

TD
768
.D54
1985